OPERATION MANUAL

Mimaki

UV INKJET PRINTER

JFX200-2513

OPERATION MANUAL

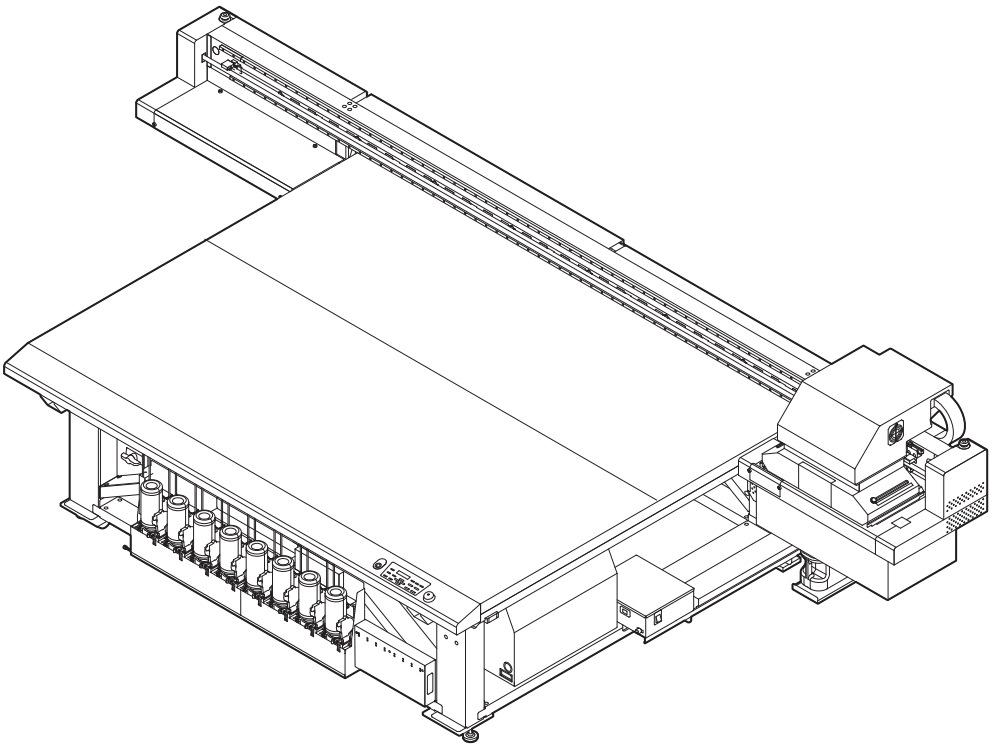

MIMAKI ENGINEERING CO., LTD.

https://mimaki.com/

D202563-28

Original instructions

TABLE OF CONTENS

CAUTION v
DISCLAIMER OF WARRANTY v
Requests v
FCC Statement (USA) v
Interference to televisions and radios vi
Restriction in use vi
Foreword vii
About usable ink vii
On This Operation manual vii
Safety Precautions viii
Symbols viii
Warning labels xiv

Chapter 1
Before Use

About installing this machine 1-2
Where to Install This Machine 1-2
Working Environmental Temperature 1-2
About fixing machine 1-3
Moving This Machine 1-3
Names of Parts and Functions 1-4
Front Side of the Machine 1-4
Rear Side and Right Side of the Machine 1-4
Operation Panel 1-5
Carriage 1-6
Capping station 1-6
EMERGENCY SWITCH 1-6
Connecting Cables 1-7
Connecting USB2.0 Interface Cable 1-7
Connecting Power Supply Cable 1-8
Ink bottles 1-9
Replace the ink bottle 1-13
If the light-blocking cover comes off 1-15
For Ink bottle lamps 1-16
Ink usage restrictions 1-16
About ink end and ink near end 1-16
Caution in handling of ink bottles 1-17
Media 1-18
Usable sizes of media 1-18
Caution in handling of medias 1-18

Chapter 2
Basic Operations

Workflow 2-2
Turning the Power ON/OFF 2-3
Turning the Power ON 2-3
Turning the Power OFF 2-4
Setting a Media 2-5

Setting the Media 2-5
Move the irradiation position of the UV lamp 2-8
Best-suited position of UV lamp according to printing 2-8
Positioning method of UV lamp 2-12
Test Printing 2-13
Test Printing 2-14
Head Cleaning 2-15
About head cleaning 2-15
Perform head cleaning depending on the test printing result 2-15
Printing Data 2-16
Starting a Printing Operation 2-16
Stopping a printing operation halfway 2-17
Deleting Received Data (Data Clear) 2-17
Move the Y-bar 2-18

Chapter 3
Extended Functions

Changing origin 3-2
Changing origin with JOG keys 3-2
Changing origin with FUNCTION menu 3-3
Registering the thickness of the media 3-4
Register the thickness of the media manually 3-4
Adjust head gap with the or keys 3-4
Measuring the thickness of the media automatically 3-5
Registering Head gap value 3-6
List of Functions 3-7
Correct the ink drop position for bidirectional printing 3-8
PatternCorrect dot position 3-8
Setting Logical Seek 3-10
Setting UV mode 3-11
Perform setting to reduce stripes between passes 3-12
What is the MAPS Function? 3-12
Setting MAPS1 Function 3-12
Setting MAPS2 Function (4 color) 3-13
Setting MAPS2 Function (4 color + special color ink) 3-14
Setting Work Change 3-17
Setting Ionizer 3-18
Setting Auto Cleaning 3-19
Setting nozzle face cleaning time 3-20
Other Settings 3-21
Machine Settings 3-22
Setting a AUTO Power-off 3-22
Setting Time 3-23
Setting Units 3-24
Setting a KEY BUZZER 3-25
Setting a LANGUAGE 3-26
Initializing the Settings 3-27
Confirming Machine Information 3-28

Check the using status of the machine 3-28
Check the machine version information 3-29
Displaying the Information of this machine 3-30

Chapter 4
Maintenance

Maintenance 4-2
Precautions for Maintenance 4-2
About Cleaning liquid 4-2
Maintenance of frame component 4-2
Cleaning the table 4-3
MBIS Maintenance 4-4
Cleaning the LM guide 4-4
Maintaining the Capping Station 4-5
Cleaning the Wiper and Cap 4-5
Cleaning the around station 4-8
Washing the Ink Discharge Passage (DISWAY WASH) .. 4-9
When the Machine Is Not Used for a Long Time (CUSTODY WASH) 4-10
Cleaning the Head and the Area around It 4-13
Cleaning the Print Head Nozzle Surface 4-15
When Nozzle Clogging Cannot Be Solved 4-17
Filling with ink from the sub tank to the head 4-17
Washing of Head nozzle 4-18
Washing of Head nozzle (When Using the PR-200 ink) . 4-20
If nozzle missing due to color mixture of ink or aeration . 4-23
Alternative nozzles for printing, when nozzles missing can not be improved 4-26
Automatic Maintenance Function 4-31
Setting the Refreshing Intervals 4-31
Setting the Cleaning Intervals 4-32
Replacing consumables 4-33
Replacing the wiper 4-33
If a Waste Ink Tank Confirmation Message Appears 4-34
Replacing the waste ink tank before the waste ink tank confirmation message is displayed (1) 4-37
Replacing the waste ink tank before the waste ink tank confirmation message is displayed (2) 4-38
Ink bottle cap replacement 4-38
Refilling antifreeze mixed water 4-39
Refill cooling water 4-40
Exchange the flushing filter 4-42
If a Flushing Filter Exchange Message Appears 4-42
Replacing the flushing filter before the replacement message is displayed 4-43

Chapter 5
Troubleshooting

Troubleshooting 5-2
Power does not turn on 5-2
The machine does not start printing 5-2
Image quality is poor 5-3
Nozzle is clogged 5-3
Ink bottle warning appears 5-4
If a Message “SHAKE WHITE INK BOTLES” Appears 5-5
If an error related to the sub tank occurs (Error 618 to 61b) 5-6
If negative pressure abnormality occurs 5-7
Warning / Error Messages 5-9
Warning messages 5-9
Error messages 5-12

Chapter 6
Appendix

Specifications 6-2
Machine specifications 6-2
Ink specifications 6-3
Order of ink bottles 6-4
Sheet for inquiry 6-5
Function Flowchart 6-6

CAUTION

DISCLAIMER OF WARRANTY

MIMAKI ENGINEERING REJECTS ALL LIABILITY FOR DAMAGE ARISING DIRECTLY OR INDIRECTLY FROM THE USE OF THE JFX200-2513 ("THE MACHINE" HEREINAFTER), WHETHER OR NOT THE PRODUCT HAS A FAILURE.
MIMAKI ENGINEERING REJECTS ALL LIABILITY FOR DAMAGE, DIRECT OR INDIRECT, TO MATERIALS CREATED WHILE USING THE MACHINE.
USING THE MACHINE IN CONJUNCTION WITH DEVICES OTHER THAN THOSE RECOMMENDED BY MIMAKI ENGINEERING MAY RESULT IN FIRE OR ACCIDENTS. SUCH INCIDENTS ARE NOT COVERED BY THE PRODUCT WARRANTY. MIMAKI ENGINEERING REJECTS ALL LIABILITY FOR DAMAGE, DIRECT OR INDIRECT, ARISING FROM SUCH INCIDENTS.
USE ONLY GENUINE MIMAKI ENGINEERING INK AND MAINTENANCE LIQUID. USE OF OTHER PRODUCTS MAY REDUCE PRINT QUALITY OR RESULT IN THE MACHINE FAILURES. SUCH INCIDENTS ARE NOT COVERED BY THE PRODUCT WARRANTY. MIMAKI ENGINEERING REJECTS ALL LIABILITY FOR DAMAGE, DIRECT OR INDIRECT, ARISING FROM SUCH INCIDENTS.
DO NOT ATTEMPT TO REFILL THE INK BOTTLES. SUCH INCIDENTS ARE NOT COVERED BY THE PRODUCT WARRANTY. MIMAKI ENGINEERING REJECTS ALL LIABILITY FOR DAMAGE, DIRECT OR INDIRECT, ARISING FROM SUCH INCIDENTS.
USE ONLY GENUINE MIMAKI ENGINEERING ANTI FREEZING LIQUID. USE OF OTHER ANTI FREEZING LIQUID MAY CAUSE FAILURES IN THE COOLING DEVICE. SUCH INCIDENTS ARE NOT COVERED BY THE PRODUCT WARRANTY. MIMAKI ENGINEERING REJECTS ALL LIABILITY FOR DAMAGE, DIRECT OR INDIRECT, ARISING FROM SUCH INCIDENTS.
ABSOLUTELY DO NOT USE UV-LED UNITS OR UV POWER SUPPLY UNITS OTHER THAN GENUINE MIMAKI ENGINEERING DEVICES. USING DEVICES OTHER THAN GENUINE MIMAKI ENGINEERING DEVICES MAY RESULT IN FAILURE, ELECTRIC SHOCK, OR FIRE. SUCH INCIDENTS ARE NOT COVERED BY THE PRODUCT WARRANTY. MIMAKI ENGINEERING REJECTS ALL LIABILITY FOR DAMAGE, DIRECT OR INDIRECT, ARISING FROM SUCH INCIDENTS.

Requests

- This Operation manual has been carefully prepared for your easy understanding.
  However, please do not hesitate to contact a distributor in your district or our office if you have any inquiry.
- Description contained in this Operation manual are subject to change without notice for improvement.

FCC Statement (USA)

This equipment has been tested and found to comply with the limits for a Class A digital device, pursuant to Part 15 of the FCC Rules. These limits are designed to provide reasonable protection against harmful interference when the equipment is operated in a commercial environment. This equipment generates, uses and can radiate radio frequency energy and, if not installed and used in accordance with the Operation manual, may cause harmful interference to radio communications.
Operation of this equipment in a residential area is likely to cause harmful interference in which case the user will be required to correct the interference at his own expense.
In the case where MIMAKI-recommended cable is not used for connection of this machine, limits provided by FCC rules can be exceeded.
To prevent this, use of MIMAKI-recommended cable is essential for the connection of this printer.

Interference to televisions and radios

The product described in this manual generates high frequency when operating.
The product can interfere with radios and televisions if set up or commissioned under improper conditions.
The product is not guaranteed against any damage to specific-purpose radio and televisions.
The product's interference with your radio or television will be checked by turning on/off the power button of the product.
In the event that the product is the cause of interference, try to eliminate it by taking one of the following corrective measures or taking some of them in combination.

- Change the orientation of the antenna of the television set or radio to find a position without reception difficulty.
- Separate the television set or radio from this product.
- Plug the power cord of this product into an outlet which is isolated from power circuits connected to the television set or radio.

Restriction in use

Restriction in use

This machine features high-speed parts, hot parts and UV irradiating parts which need very careful attention. Use of this machine is limited to the user who understands the risks of inappropriate use completely.

Restriction for user

The user of this machine shall get proper training. Limit to the user those who got proper training to operate this machine.

Restriction area

- Coming closer to the machine is prohibited for the person other than the user who got proper training. Set up the restriction area within the range indicated below. You have to install this machine in the dedicated room, or, set up a fence and make the person recognize that it is a dangerous area.
- If restricting the area with safety fences, set up the safety fences in accordance with the EN ISO13857 standards.
- If installing this machine in a dedicated room, install a lock or interlock on the room's door, and perform risk assessment for the final installation place before using the machine.

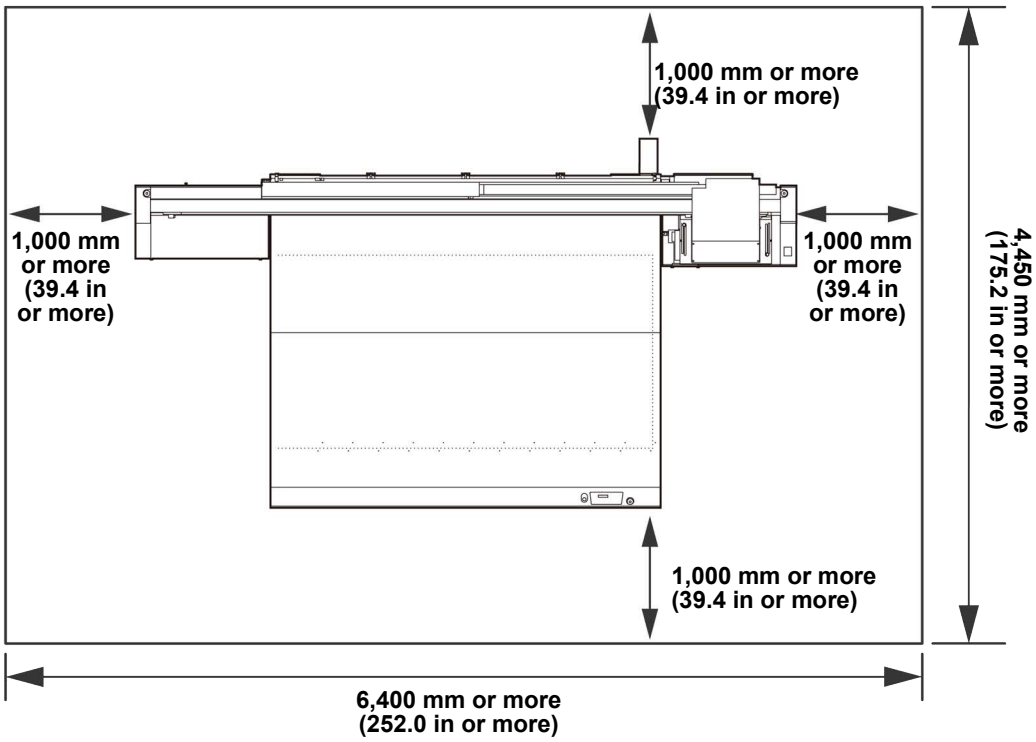

Foreword

Congratulations on your purchase of MIMAKI color ink jet printer "JFX200 Series" .
“JFX200 Series” is a UV inkjet printer that can print with UV ink realizing high speed and high image quality.

About usable ink

Usable ink for this machine is LUS-150, LUS-200, LH100, LUS-120,LUS-350 (4-color/ 4-color+white ink / 4-color+white + clear ink model).

4-colors version	: 2 each of Cyan, Magenta, Yellow and Black color ink bottle are use.
4-colors + White version	: One bottle each of yellow and black, and two bottles of cyan, magenta, white are used.
4-colors + White + Clear version (LUS150, LH100, LUS120)	: One bottle each of cyan, magenta, yellow and black, and two bottles of white, clear are used.
4-colors + White + Clear + Primer version (LUS150, LH100)	: One bottle each of Cyan, Magenta, Yellow, Black, Clear and Primer, and two bottles of white are used.
6-colors + White version (only LUS150)	: One bottle each of Cyan, Magenta, Yellow, Black, Light cyan and Light magenta, and two bottles of white are used.

Important! **Depending on the ink type, the available clear ink type differs.**

Ink type	Ink type of clear ink
LUS150	LH100
LH100	LH100
LUS120	HUS120

- Please note that other than above combination can not be used.

On This Operation manual

- This Operation manual is describing the operations and maintenance of "UV inkjet printer JFX200 Series" (called as this machine hereafter)
- JFX200-2513 are identical with models IPPR671.
- Read this Operation manual carefully and understand them thoroughly to use.
- This Operation manual has been carefully prepared for your easy understanding, however, please do not hesitate to contact a distributor in your district or our office if you have any inquiry.
- Descriptions contained in this Operation manual are subject to change without any notice for improvement.
- You can also download the latest manual from our website.

Reproduction of this manual is strictly prohibited.
All Rights Reserved.Copyright
© 2016 MIMAKI ENGINEERING Co., Ltd.

Safety Precautions

Symbols

Symbols are used in this Operation Manual for safe operation and for prevention of damage to the machine.
The indicated sign is different depending on the content of caution.
Symbols and their meanings are given below. Please follow these instructions as you read this manual.

Examples of symbols

	Meaning
Warning	Failure to observe the instructions given with this symbol can result in death or serious injuries to personnel. Be sure to read it carefully and use it properly.
Caution	Failure to observe the instructions given with this symbol can result in injuries to personnel or damage to property.
Important!	Important notes in use of this machine are given with this symbol. Understand the notes thoroughly to operate the machine properly.
	Useful information is given with this symbol. Refer to the information to operate the machine properly.
	Indicates the reference page for related contents.
	The symbol " △ " indicates that the instructions must be observed as strictly as the CAUTION instructions (including DANGER and WARNING instructions). A sign representing a precaution (the sign shown at left warns of hazardous voltage) is shown in the triangle.
	The symbol "⃠" indicates that it is the forbidden action. If there is a concrete instruction, it is indicated in or around the symbol "⃠".
	The symbol "●" indicates that the action is forced to be done or the instruction must be observed. If there is a concrete instruction, it is indicated in the symbol "●".

Warning for Use

⚠ WARNING

- Be sure to setup the appropriate air-moving system in case of using this machine in a closed room or a room with bad ventilation.
- The ink used for this machine falls into the category of UN No.3082 and UN Class 9. Since the ink is flammable, never use fire when using this machine.
- When cleaning the ink station and head, be sure to wear the included safety glasses and gloves.
- If anyone drinks ink or maintenance liquid in mistake, get the person to vomit and see a doctor immediately.Do not allow him or her drink vomit.Then, refer SDS about the inquiry.
- If you absorb a lot of vapor and feel bad, immediately move to a location where fresh air is present and then keep yourself warm and quiet.Then, consult a doctor as soon as possible.
- Discard the waste ink according to the local regulations of the area this unit is used.
- Prevent any leaks into sewage or natural water systems.
- In case of ink leakage, please turn off the main power, unplug the power cable and call for service to our service or dealer.

Do not disassemble or remodel this machine

- Never disassemble or remodel the main unit of the printer and the ink cartridge.Disassembling/remodeling any of them will result in electric shocks or breakdown of this machine.

Do not use this machine in damp places

- Avoid damp environments when putting this machine into service. Do not splash water onto this machine.Highhumidity or water will give rise to fire, electric shocks or breakdown of this machine.

Abnormal event occurs

- If this machine is used under an abnormal condition where this machine produces smoke or unpleasant smell, fire or electric shocks can result.Be sure to turn off the power switch immediately and detach the plug from the receptacle.Check first to be sure that this machine no longer produces smoke, and contact a distributor in your district for repair.
- Never repair your device by yourself since it is very dangerous for you to do so.

Wearing protective devices

- When cleaning parts such as the head, wiper, or cap, which may scatter ink and maintenance liquid, be sure to wear the included safety glasses and gloves, or ink and maintenance liquid might enter your eyes or ink and maintenance liquid put on your hands might make your hands rough.

Handling of ink bottles

- Some of the ingredients (UV Curing initiator) have toxic consequences to aquatic life.Avoid leak into water system or sewage containing water.
- Store ink bottles and waste ink tank in a place that is out of the reach of children.
- If ink settles on the skin or clothes, immediately wash it off with detergent or water.If you get ink in your eyes, immediately wash your eyes with a lot of clean water for at least 15 minutes. In this case, also wash the backside of eyelids to rinse ink away completely. Then, consult a doctor as soon as possible.

Grounding work

- Grounding work is necessary to prevent electrocution accidents when installing an outlet.
- Carry out the grounding work.

Handling of the power cable

- Use a power cable attached to this unit.
- Take care not to damage, break or work on the power cable.If a heavy matter is placed on the power cable, heated or drawn, the power cable can break to cause fire or electric shocks.

Do not ride on the table

- There is a possibility that the board accuracy falls. Please never ride on top of the table.

Handling of vacuum

- Never disassemble or remodel the vacuum.
  Also, do not touch the relief valve (pressure regulating valve) or cover the vacuum outlet.
  Doing so will decrease the suction power and cause overheating or malfunction. (Vacuum is placed directly under the table.)
- High-pitched sounds may occasionally be heard from the vacuum when the machine is used in a low-temperature environment, but this is not a fault.

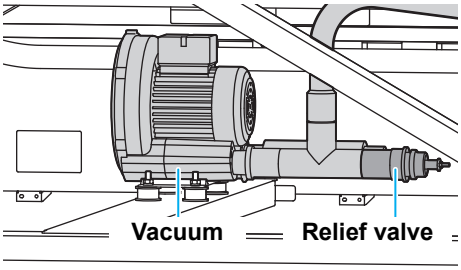

WARNING

Power supply and voltage

- This unit contains parts applied high voltage.Carrying out electrical work by those unauthorized for that work is prohibited.
- Use it with the displayed power supply specifications. The power-supply voltage of this machine shall be single-phase 200 to 240 Vac 15 A and less. (You cannot use this machine in the 100V system.)
- Be sure to always disconnect the power plug when performing maintenance in order to prevent electrical shock. Depending on this machine, one minute might be required for condenser discharging time. Be sure to always wait five minutes or more after disconnecting the power plug before performing any work.
- Be sure to carry out grounding work to prevent electrical shock.
- The main power circuit breaker should be set ON only by personnel with sufficient knowledge about operations of this unit.
- Do not touch the LED UV unit on or right after the lamp off with bare hands to avoid from burn injury.

Handling the Anti-freezing liquid

- Use the exclusive Anti-freezing liquid by Mimaki ,or the machine may be damaged.
- If the Anti-freezing liquid or Cooling tank water gets on the skin or clothes, immediately wash it off with soap.
  If you get the Anti-freezing liquid or Cooling tank water in your eyes, immediately wash your eyes with a lot of clean water.
  Then, consult a doctor as soon as possible.If high temperature Anti-freezing liquid or Cooling tank water gets on the skin, immediately wash it off with soap and cool with iced water. Then, consult a doctor as soon as possible.
- Before using the Anti-freezing liquid, be sure to read the Safety Data Sheet (SDS).
- If you swallowed the Anti-freezing liquid or mixed soft water with antifreezing liquid accidentally, try to get to vomit, and then consult a doctor as soon as possible.
- When unused the Anti-freezing liquid or used Cooling tank water should discard as followings,
  - Incinerating the fluid which is absorbed to the sawdust or waste cloth.
  - Entrust them to an industrial waste disposal contractor, clarifying their contents.
- Avoid ignition such as static electricity and impact spark.
- Be sure to wear safety glassess and gloves for handling the Anti-freezing liquid.

Handling of LED UV unit

- Do not use the LED UV in an ambience with a possibility of catching fire (gasoline, combustible gas spray, thinner, lacquer, powder dust, etc.). In addition, do not put paper or cloth near or on the LEDUV, or it may cause fire.or it may cause electrical shock.
- Never look at the LED UV being lit with your naked eyes,or it may cause pain in your eyes or visual impairment.Be sure to wear safety glasses.
- Do not apply ultraviolet (UV) light directly to your skin,or it may cause irritation on your skin.
- It is recommended to replace the LED UV unit within the rated life.

Disposition of this machine

- When discarding this machine, request the treatment of it for an industrial waste disposal contractor.
- Treat it properly in compliance with regulation in the local area.

Keep children away

- Keep children away from this machine.

Precautions in Use

CAUTION

Protection against dust

- It is strongly recommended to use this machine in a room that is not dusty.
- When leaving the workshop after the working hours, be sure to take off any media from the roll hanger.If any media is left on the roll hanger, dust can put on it.
- Store media in a bag.Wiping off dust accumulated on a media will adversely affect the media due to static electricity.
- Dust in the head will also cause drops of ink to fall abruptly down on the media during printing.If this phenomenon takes place, be sure to clean up the head. (☞ P.2-15)

Periodic exchange parts

- There are some parts which must be replaced by service men.You have to make a contract with distributors or dealers for after-sale service.

Keep the machine flatly

- Be sure to adjust the level foot to keep the machine flatly.

Handling of maintenance liquid

- Be sure to store the maintenance liquid in a cold and dark place.Store the maintenance liquid in a place that is out of the reach of children.

Warning labels

- This machine is adhered with a warning label. Be sure understand firmly the warnings given on the labels.In the case where any of the warning label has become so soiled that the warning message is illegible or has come off, purchase a new one from your local distributor or our office.

Note on maintenance

- When cleaning parts such as the head, wiper, or cap, make sure to wear the attached gloves.

Handling the Anti-freezing liquid

- Be sure to store the Anti-freezing liquid in a cold and dark place.
- Store the Anti-freezing liquid in a place that is out of the reach of children.

Power supply

- Leave the breaker turned ON.
- Do not turn off the main power switch on the right side of this machine.

Handling of ink bottles

- Precautions regarding ink are indicated on the Ink bottle. Read these carefully and make sure you understand the contents before using the product.
- Use the JFX200 genuine ink. Remember that the user shall be filled for a repair to correct any damage resulting from the use of ink other than the exclusive type.
- The machine does not operate with any ink other than the JFX200 genuine ink.
- Do not use the JFX200 genuine ink with other printers, as doing so may cause damage to such machines.
- Do not refill ink other than the one specified by our company in the bottle. We are not responsible for any defects caused by your using such an ink.
- If the ink bottle is moved from a cold place to a warm place, leave it in the room temperature for three hours or more before using it.
- Open the ink bottle just before installing it in the machine. If it is opened and left for an extended period of time, normal printing performance of the machine may not be ensured.
- Make sure to store ink bottles in a cool and dark place.
- Store ink bottles and waste ink tank in a place that is out of the reach of children.
- Be sure to thoroughly consume the ink in the ink bottle, once it is opened, within three months. If an extended period of time has passed away after opening the ink bottle, printing quality would be poor.
- Neither pound the ink bottle nor shake it violently, as doing so can cause leakage of ink.
- Do not touch or stain the contacts of the IC chip, as doing so may cause damage to the print circuit board.
- Waste ink is equivalent to waste oil of industrial waste. Request an industrial waste disposal company for disposal of waste ink.

CAUTION

Handling of media

- Use media recommended by MIMAKI to ensure reliable, high-quality printing.
- Pay attention to the expansion and contraction of the media.
  Do not use media immediately after unpacking. The media can be affected by the room temperature and humidity, and thus it may expand and contract. The media have to be left in the atmosphere in which they are to be used for 30 minutes or more after unpacked.
- Do not use curled media.
  The use of curled media can not only cause a media jam but also affect print quality. Straighten the sheet of media, if significantly curled, before using it for printing. If a regular-sized coated sheet of media is rolled and stored, the coated side has to face outside.

About UV light

- A little UV light leaks from the LED UV unit. UV light applied to your skin might cause inflammation and/or skin cancer.Though weak UV light might cause no inflammation, repeated exposure to it may lead to chronic disorders.Avoid applying UV light to your skin and eyes.
- Possible damage to your eyes due to ultraviolet is acute disorder (feeling like something is in your eye, pain and flow of tears) and chronic disorder (cataract etc.). When using this machine, take protective measures such as gloves, long-sleeve cloth, light-resistant mask, attached light-resistant glasses, etc.

About hot parts

- The LED UV unit and the Post Cure Unit become very hot. When carrying out maintenance, wait until the temperature has been sufficiently lowered after the lamp is turned OFF.
- Do not touch the parts with the caution label placed and their vicinity, or burn injury may occur.
- When it is unavoidable to touch hot parts, be sure to wear heat-insulating gloves to protect your hands.

Notes on LED UV unit

- When handling the LED UV or the silica glass on the bottom of the irradiation device, be sure to wear the gloves attached and never touch them with bare hands, or the UV ink curing level is significantly lowered. If the LED UV or silica glass is contaminated, wipe it with clean gauze moistened with alcohol.(Do not use alcohol for cleaning the exterior cover, or the paint will peel off.)
- Never use those UV devices other than those recommended by Mimaki. We would take no responsibility for any troubles caused through the use of a UV devices not recommended by Mimaki.

About cleaning

- After using the unit long time, foreign materials and dust may be gathered on the conductive and insulating parts, causing electric leakage.Periodically clean such parts.
- For cleaning, do not use compressed air because it scatters foreign materials and dust, which may cause malfunctions when put inside the conductive parts.Be sure to use vacuum cleaner for cleaning of foreign materials and dust.
- Do not use the unit in a place where there is a possibility of being wet, or electrical leakage may occur.
- Electrical leakage, if it should occur, may lead to electrical shock of personnel or fire.
- In order to prevent accidents from occurring, be sure to carry out periodic inspections and replacement of timechange components.

About firing and smoking

- Touching hot parts such as the LED UV unit with combustible materials may cause firing and/or smoking. Leaving combustible materials under the UV LED unit for a couple minutes may also cause firing and/or smoking.
- After the unit is used long time, foreign materials or dust gathered on the stabilizer or other parts may cause electrical leakage or insulation deterioration may cause firing and/or smoking.Periodically clean the parts and measure the insulation resistance, replacing deteriorated parts, if any.
- After the unit is used long time, screws, etc. on the conductive parts may be loosened, causing firing and/or smoking.Periodically tighten such screws.
- Because this unit is not of explosion proof type,do not use it in an ambience with hazardous materials, or a possibility of explosion may arise.
- If abnormalities of the unit such as a strange odor, a smoking or a spark burn are found, turn the power off and call Mimaki immediately.

Cautions on Installation

CAUTION		
A place exposed to direct sunlight	**On an inclined surface**	**A place where temperature or humidity varies significantly**
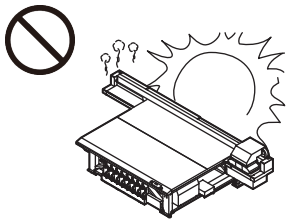	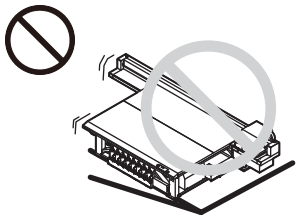	• Use the machine under the following environmental conditions: • Operating environment: 15 to 30 °C (59 to 86 °F) 35 to 65 % (Rh)
A place that vibrates	**A place exposed to direct air flow from an air conditioner or the like.**	**Around a place where fire is used**
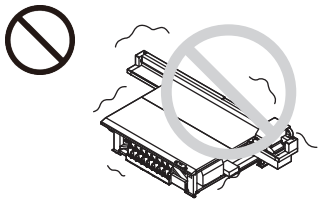	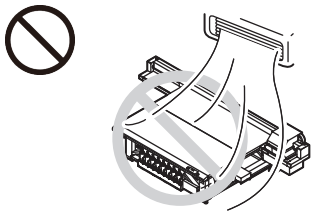	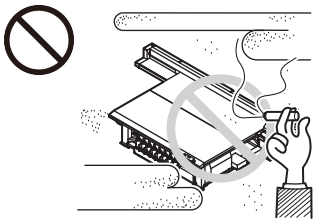
A place with much dust	**A place with chemicals around**	
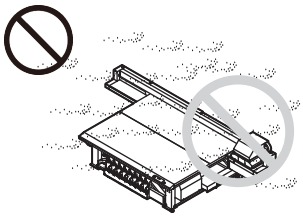	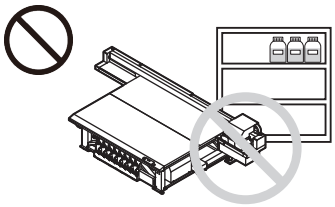	

Warning labels

Warning labels are stuck on the machine. Be sure to fully understand the warning given on the labels.
If a warning label is illegible due to stains or has come off, purchase a new one from a distributor or our sales office.

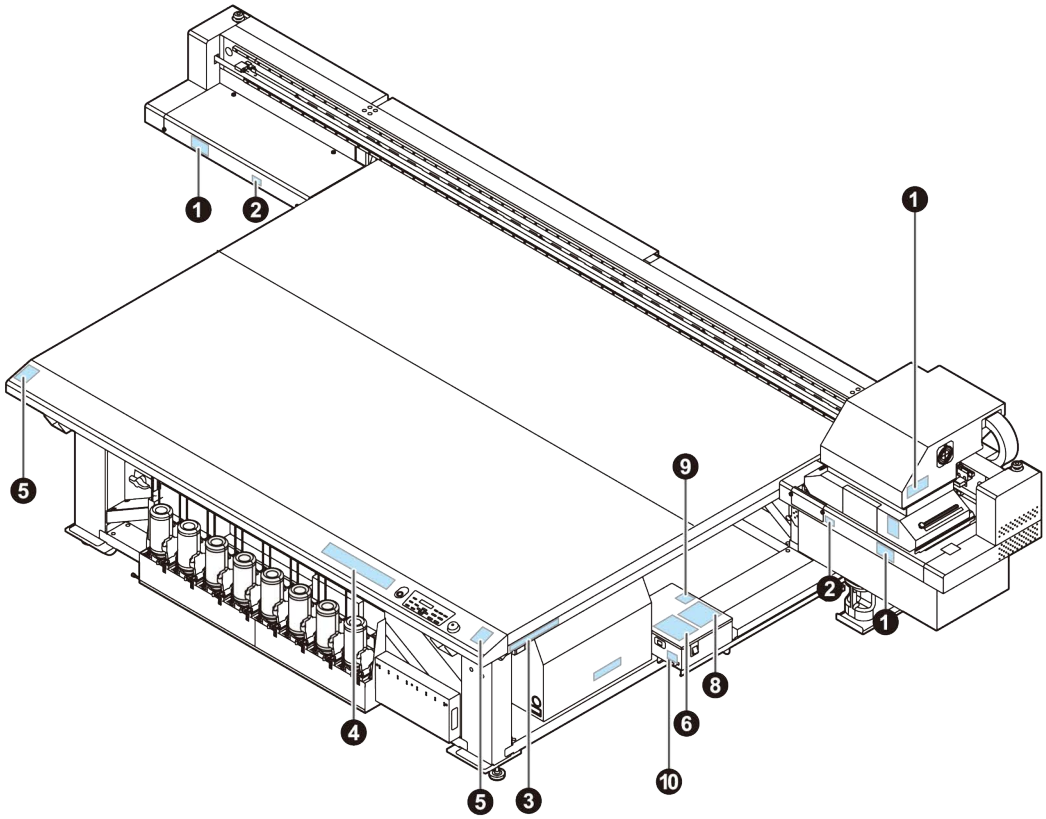

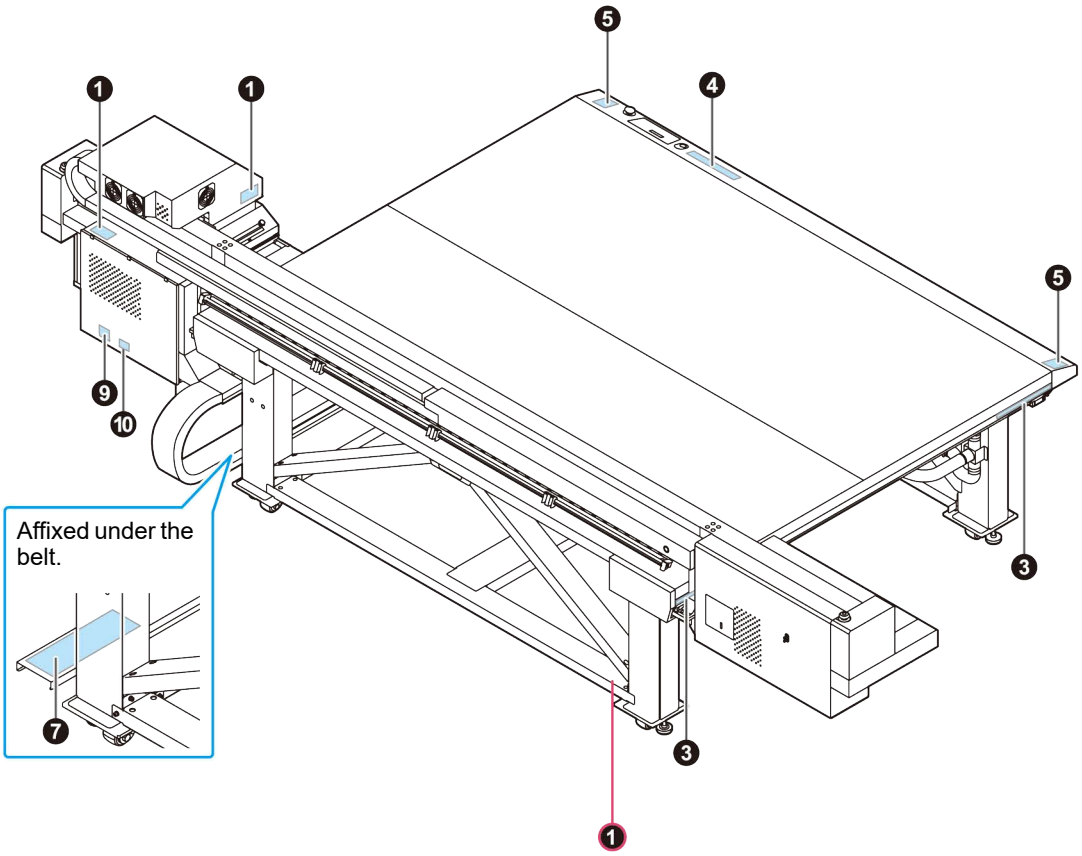

1:Reorder .M909381

2:Reorder .M903330

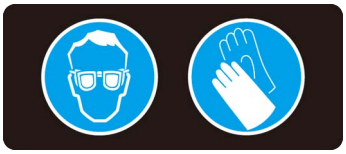

3:Reorder .M906115

6:Reorder .M902663

7:Reorder .M905980

8:Reorder .M906311

8:Reorder .M906311

8:Reorder .M906311

See SET UP GUIDE before connecting to the supply.

電源を接続する前に、必ず
セットアップガイドを読むこと。

在接通□源之前清一定□□安装説明□。

8:Reorder .M906311

Chapter 1
Before Use

This chapter

describes the items required to understand before use, such as the name of each part of the machine or the installation procedures.

About installing this machine 1-2
Where to Install This Machine 1-2
Working Environmental Temperature 1-2
About fixing machine 1-3
Moving This Machine 1-3
Names of Parts and Functions 1-4
Front Side of the Machine 1-4
Rear Side and Right Side of the Machine ... 1-4
Operation Panel 1-5
Carriage 1-6
Capping station 1-6
EMERGENCY SWITCH 1-6
Connecting Cables 1-7
Connecting USB2.0 Interface Cable 1-7
Connecting Power Supply Cable 1-8
Ink bottles 1-9
Setting ink bottles 1-9
Replace the ink bottle 1-12
If the light-blocking cover comes off 1-13
For Ink bottle lamps 1-14
Ink usage restrictions 1-14
About ink end and ink near end 1-14
Caution in handling of ink bottles 1-15
Media 1-16
Usable sizes of media 1-16
Caution in handling of medias 1-16

About installing this machine

Where to Install This Machine

Secure a suitable installation space before assembling this machine.
The place of installation must have enough space for not only this machine itself, but also for the printing operation.

Model	Width	Depth	Height	Gross weight
JFX200-2513	4,400 mm (173.2 in)	2,450 mm (96.5 in)	1,250 mm (49.2 in)	650 kg (1,433 lb)

Important!

- A service engineer will perform installation work of this machine. At this time, he/ she will contact you and explain about the usage and the installation of this machine. After fully understanding that content, use this machine safely.

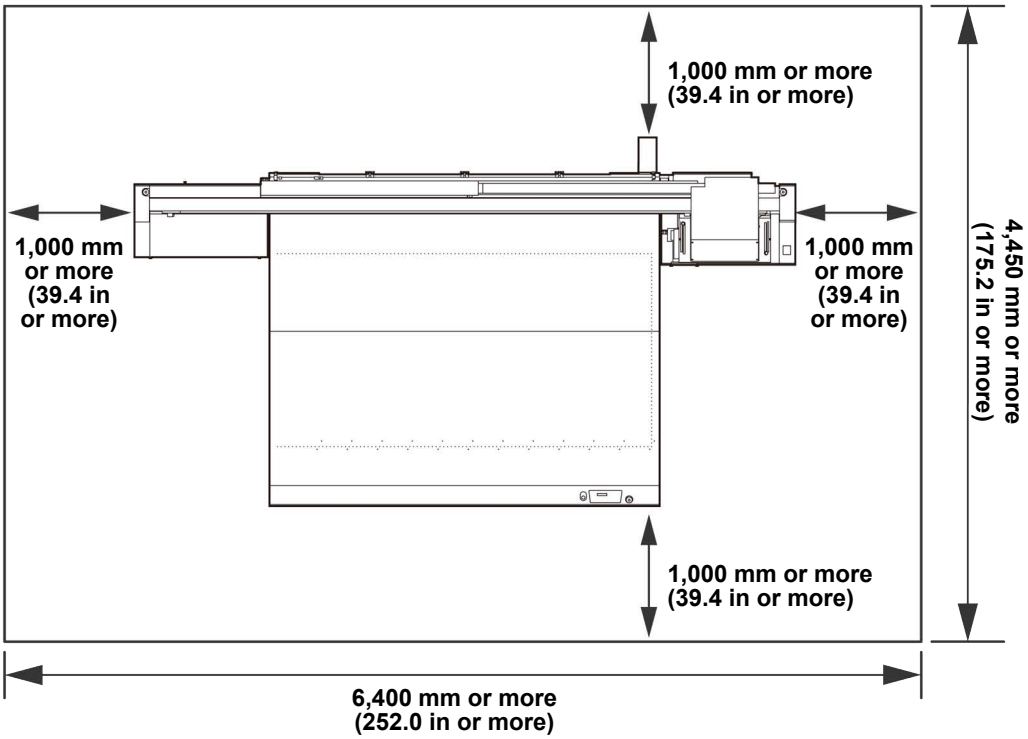

Caution

- When you usually use photographic fixer, do not install this machine in a room filled with vapor of photographic fixer. If you install this machine in such a room, ink adhering to the head hardens and it may cause image quality defect that cannot be improved even if you perform head cleaning many times and may cause nozzle clogging.
- Besides photographic fixer, if you leave this machine in an environment where acidic vapor (acetic acid, muriatic acid, etc.) is generated, the same phenomenon occurs.
- Do not use the machine in an environment full of metal cutting fluids or materials containing highly volatile substances (amines, amine-denatured alcohols). Also, isolate ink, maintenance kits and the machine from such an environment. This may cause nozzle clogging.

Working Environmental Temperature

Use this machine in an environment of 15°C (59 °F) to 30°C (86 °F) to ensure reliable printing.

About fixing machine

The leg of this machine has the level foot to fix the machine.
Before turning the power ON, make sure that the printer body is fixed with the leveling feet. The printer body may start moving during operation if it is not fixed with the leveling feet.

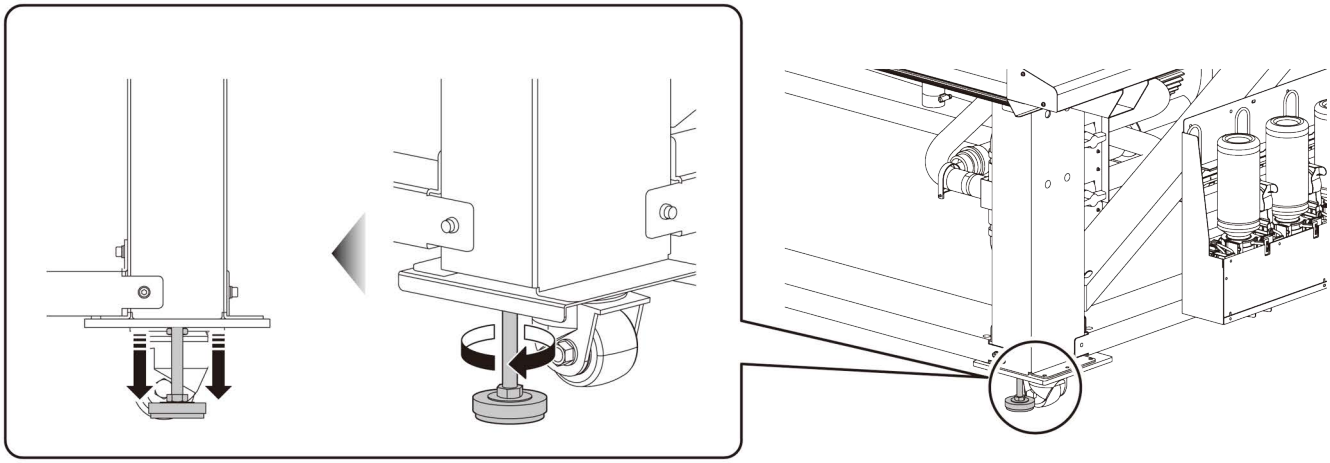

- Put the supplied base plate (gray) made of resin between each leveling foot and the floor. To hold the weight of the printer, using plate is recommended.

Moving This Machine

Important!

- When the machine is moved to any place other than on the same step-free floor, contact your distributor or our service office.
  If you move it by yourself, failure or damage may occur.
  Be sure to request your distributor or our service office to move this machine.

Names of Parts and Functions

Front Side of the Machine

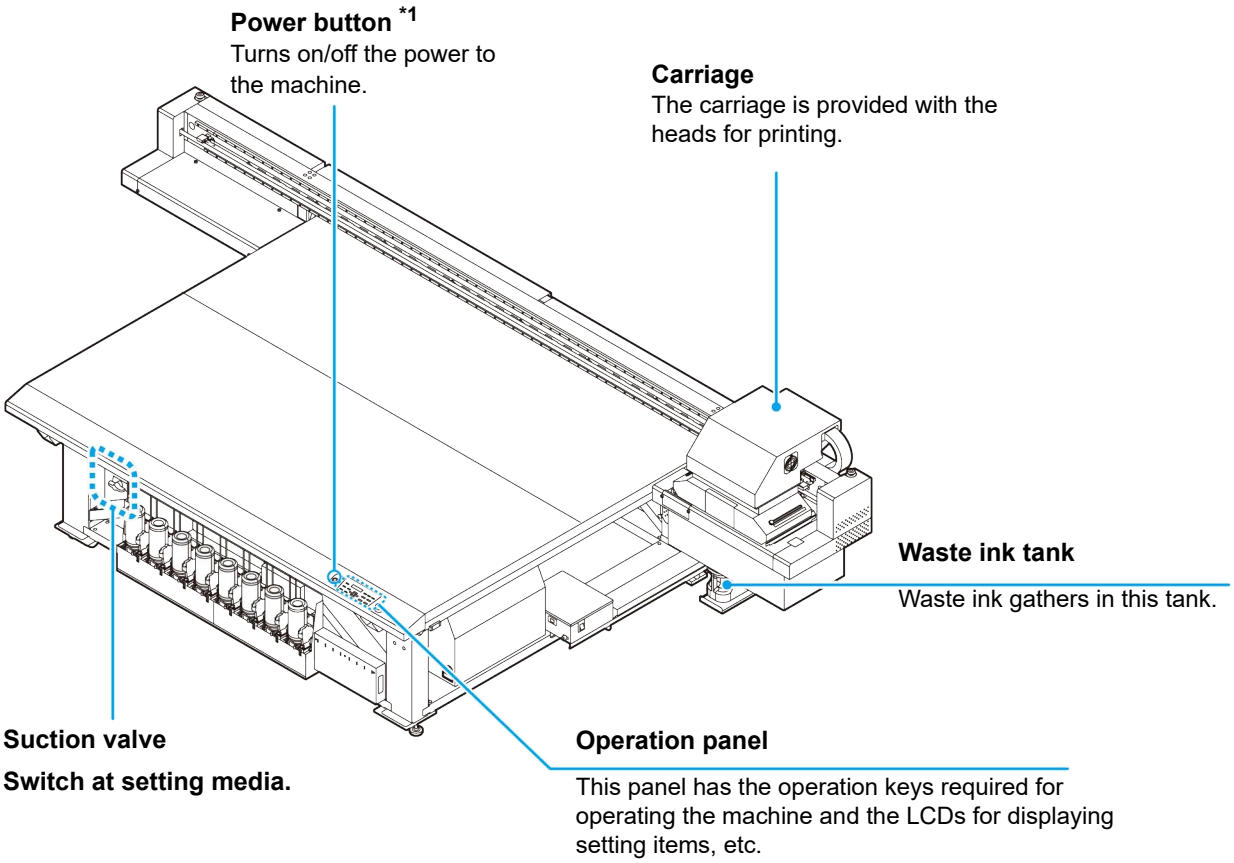

*1 : When the power supply button is turned ON, it lights in green, and when it is OFF, it goes out. The ink clogging prevention function is periodically operated even when the power button is OFF. (Auto maintenance function)

Rear Side and Right Side of the Machine

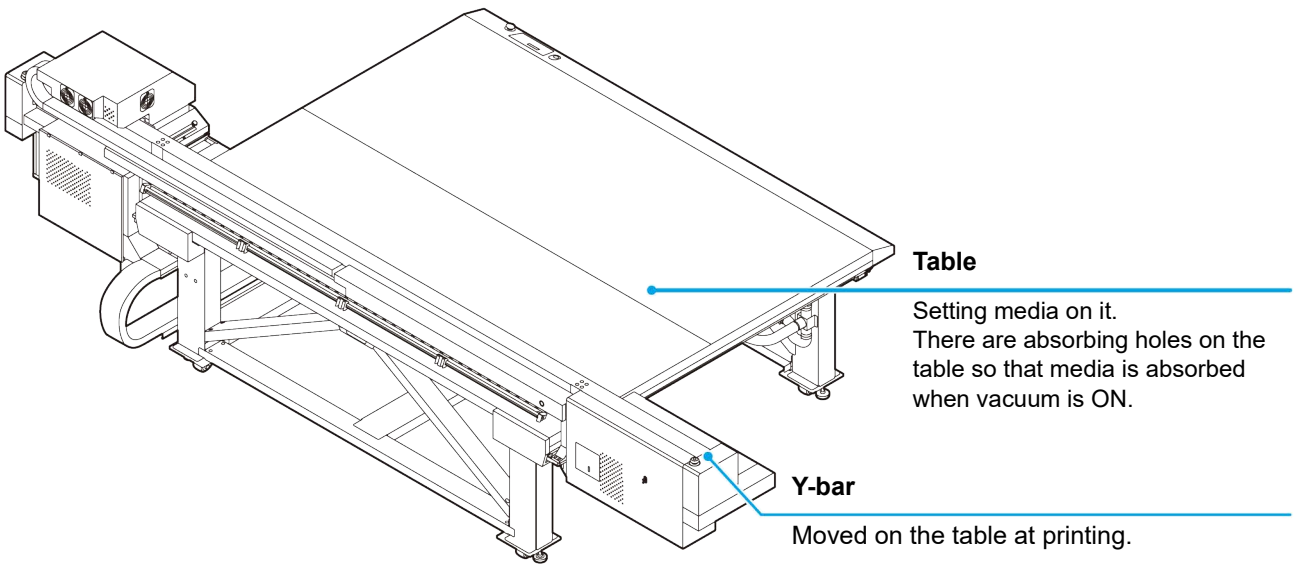

Operation Panel

Use the operation panel to make settings for printing or operate this machine.

VACUUM key
Press to vacuum the media on the table.

UP key
Press to elevate the carriage.

DOWN key
Press to down the carriage.

ADJUST key
Performs the adjusting function "Drop.POScorrect".

MAINT. key
Performs the maintenance function such as station maintenance.

POWER Lamp
Lit when the power is ON.

TEST key
Prints test patterns to check if there are any printing failures such as ink clogging.

CLEANING key
Head cleaning at ink clogging.

DATA CLEAR key
Deletes the data that have been received.

Display
Displays the status of the machine, set items and errors.

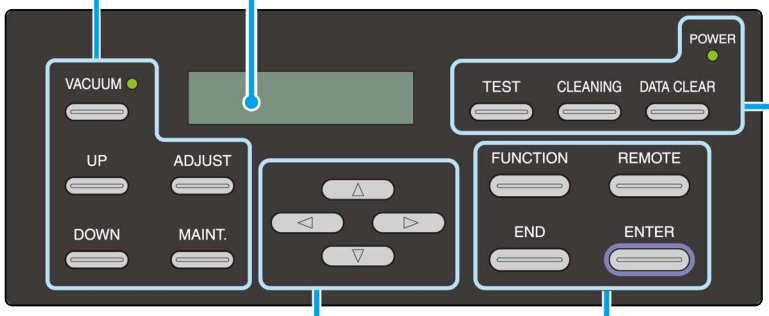

JOG key ◀ ▶ ▲ ▼
Use these keys to shift the carriage or the Y-bar in [LOCAL]. Also use them to select an item of printing conditions.

FUNCTION key
Press to use each function.

REMOTE key
Switching the Remote and the Local, and vice versa.

END key
Press to finish the setting or cancel te setting.

ENTER key
Press to determine a setting.

Carriage

The carriage is provided with the heads for printing and LED UV unit.

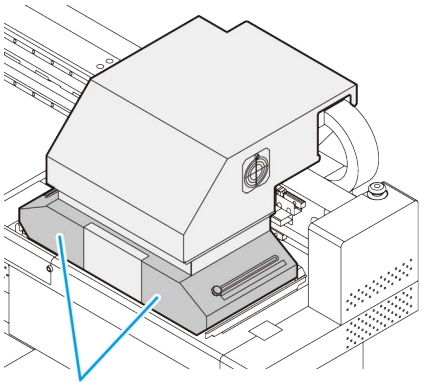

Warning

- Do not expose your naked eyes directly to the light irradiated from the LED UV when it lights.
- Do not touch the LED UV unit when it is being lit or just after it is set OFF. It may cause a burn injury, as it is very hot.

Capping station

- Be sure to wear the attached safety glasses in cleaning within the capping station to protect your eyes against ink. Otherwise, you may get ink in your eyes.

The capping station consists of the ink caps, the wiper for cleaning the heads, etc.
The ink caps prevent the nozzles in the heads from drying up.
The wiper cleans the nozzles in the heads.
The wiper is consumable.If the wiper is deformed or the media is stained, replace the wiper with a new one. (☞ P.4-33)

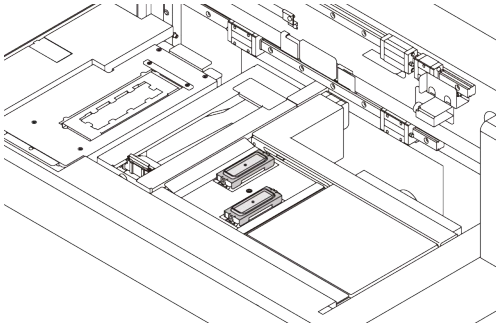

EMERGENCY SWITCH

One EMERGENCY switch is placed on the front face of the unit and 2 are placed on Y-bar.
When stopping the machine for safety reason, press the switch.

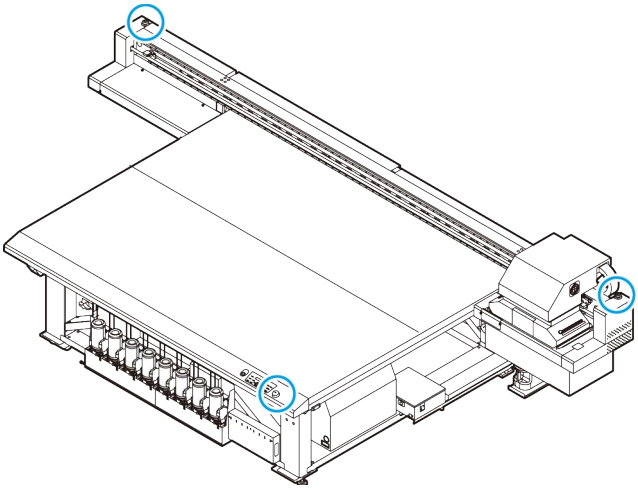

Important!

When you press the emergency switch and the machine stops, be sure to follow the procedures below:

(1) Disconnect from the outlet before resolving the fault.
(2) After checking the safety, pull the emergency switch upward (or rotate) to release.
(3) Connect to the outlet.

Connecting Cables

Connecting USB2.0 Interface Cable

Connect the PC and this machine with the USB2.0 interface cable.

Caution

- Your RIP must be compatible with USB 2.0.
- Contact a RIP maker near your location or our office when the USB2.0 interface is not attached to the PC.

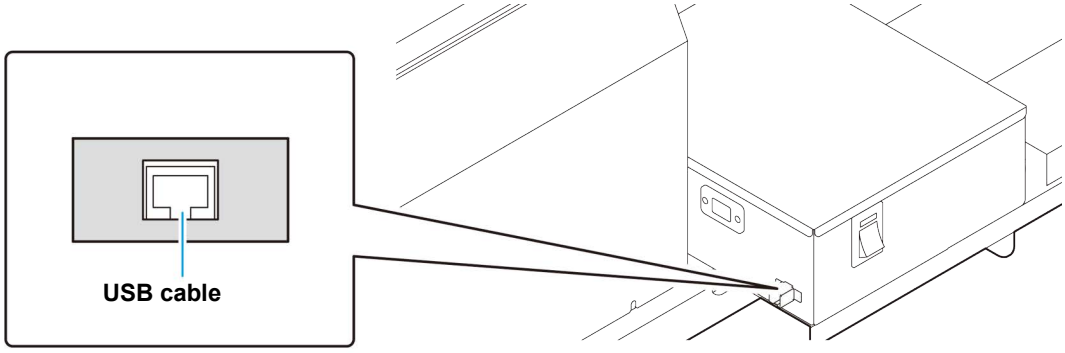

Notes on USB 2.0 Interface

Important!

- Your RIP must be compatible with USB 2.0.

● When two or more JFX200 machines are connected to one personal computer

When two or more JFX200 machines are connected to one personal computer, the personal computer may not recognize all the JFX200 machines normally.
Reconnect the unrecognized JFX200 machine to another USB port, if available, and check to see if it is recognized.If the JFX200 machine is not recognized by the newly connected USB port, use USB 2.0 repeater cables available on the market. (However, keep the distance between the JFX200 and the personal computer within 20 m.)

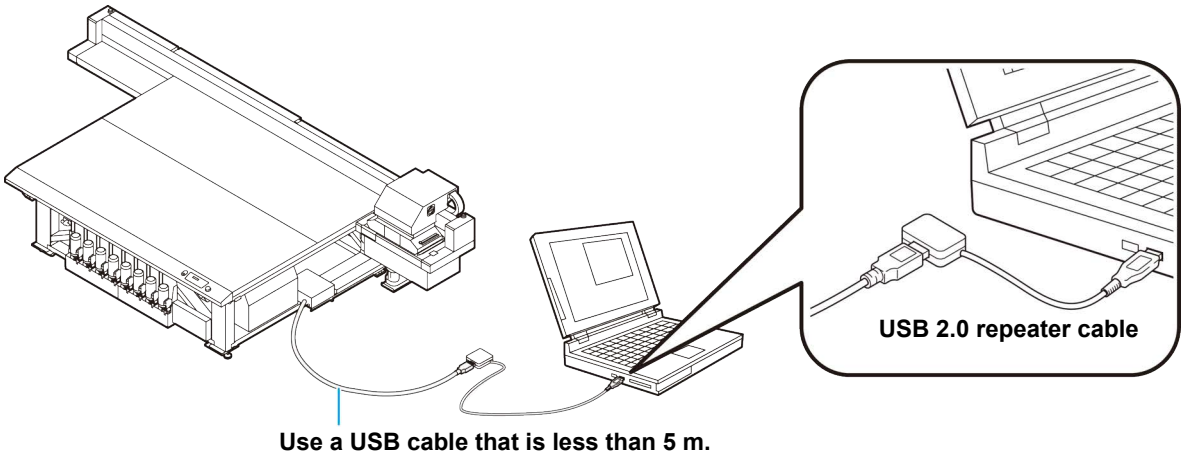

● Notes on peripheral devices in USB high speed mode

When a peripheral device (USB memory or USB HDD) to be operated in USB high speed mode is connected to the same personal computer that a JFX200 machine is connected to, the USB device may not be recognized.
When JFX200 is connected to the personal computer to which an external HDD is connected via USB, the speed of data output to JFX200 may drop.That can cause the head unit to stop temporarily at the right or left end during printing.
Use a USB cable that is less than 5 m. If it is necessary to use one that is 5 m or longer, use a commercially available USB 2.0 repeater cable.

● Removing USB memory

If a USB memory module is inserted in the personal computer to which a JFX200 machine is connected, click "Stop" in the "Safely Remove Hardware" window by following the instructions given there first and then remove the module.
Leaving a USB memory module inserted can cause [ERROR 201 COMMAND ERROR].
Copy the data onto the hard disk before outputting it for printing.

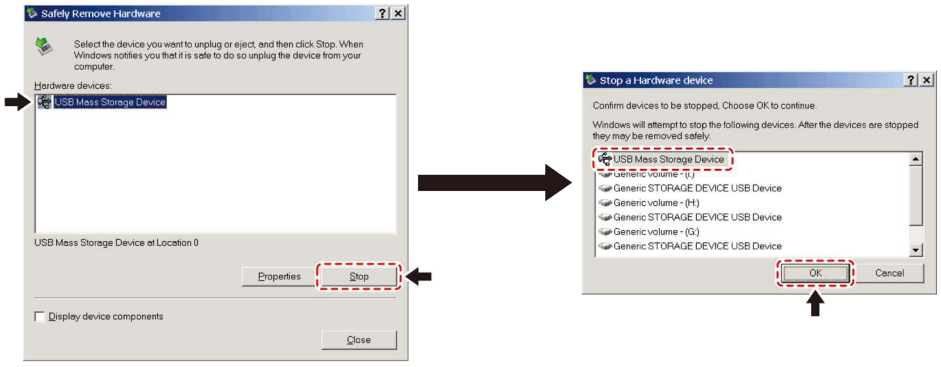

Connecting Power Supply Cable

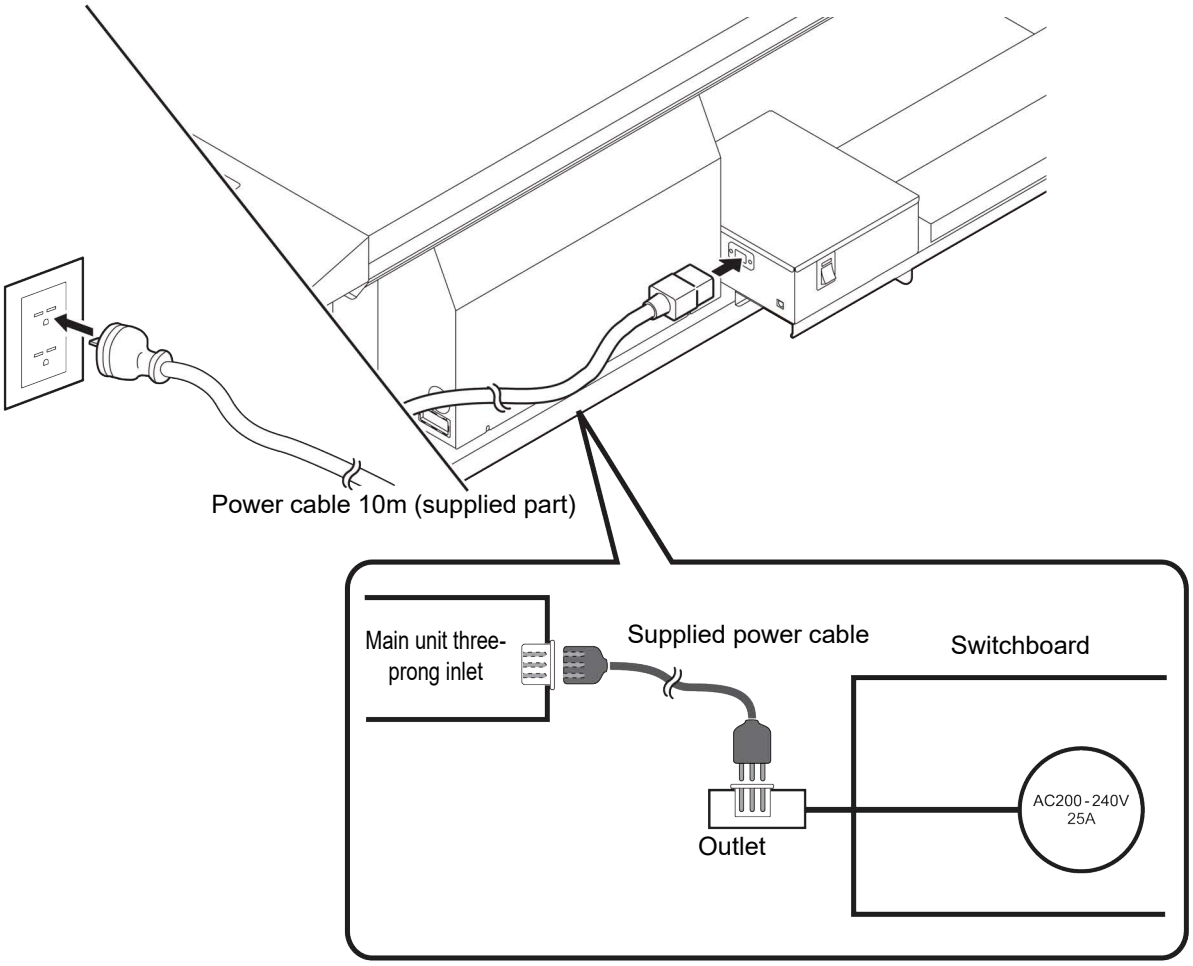

Ink bottles

Setting ink bottles

1 **Take out the ink bottle, and slowly shake it twenty times and more.**

- To prevent ink from leaking when you shake it, wear gloves and cover the ink bottle cap with a paper towel etc. Being in that status, slowly shake it twenty times and more by flowing ink.

- Before shaking it, check that the cap is firmly closed.
- If you shake it too strong, it may cause ink leakage. Therefore, perform this carefully.
- If the remaining amount of ink is less, ink in the bottle cannot be beaten enough. Tilt the ink bottle until it becomes vertical.

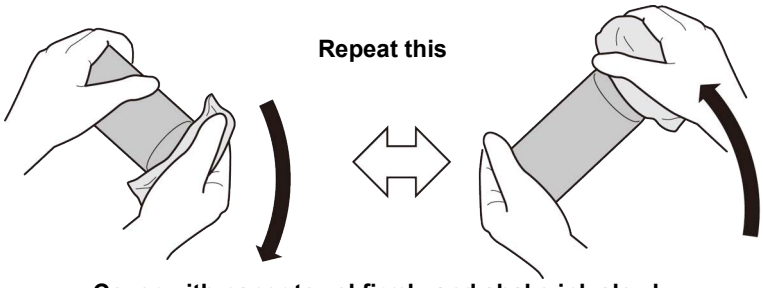

Cover with paper towel firmly and shake ink slowly

2 **Remove the cap of the ink bottle.**

Important!

- If the mouth of the ink bottle is fitted with a seal

(1) Use a craft knife tool to cut out a circle of seal. If there is any leftover cut, it may cause ink to leak.

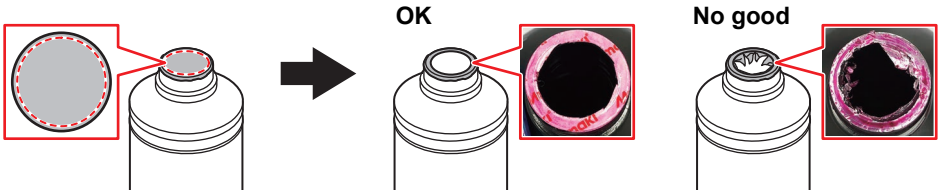

(2) Do not scratch the mouth of the ink bottle. There is a risk of ink leaking from the scratched area.

(3) Be careful not to drop pieces of the seal into the ink bottle. If you use the bottle with pieces of the seal inside, there is a risk that the special cap will get stuck and the ink supply will be interrupted.

3 Attach the specialized cap to the ink bottle.

(1) Set the specialized cap on the bottle.

- The specialized cap that is used differs depending on the type of ink that is set.

Specialized cap

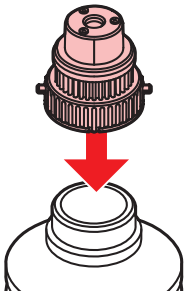

Ink type	Cap type
LUS-150 ink	【CAP A】 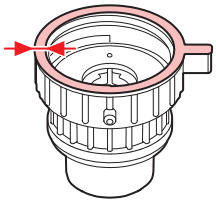
LUS-200 ink Primer ink LUS-120 ink LH100 ink LUS-350 ink	【CAP B】 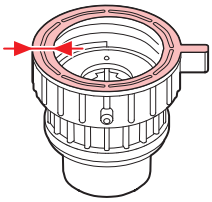
LUS-150 ink LH100 ink Primer ink	【CAP C】 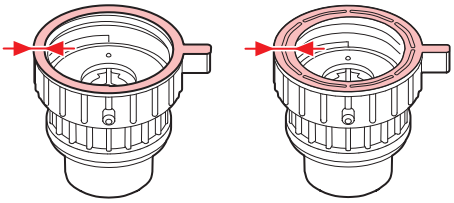

(2) Tighten the specialized cap using the tightening jig.

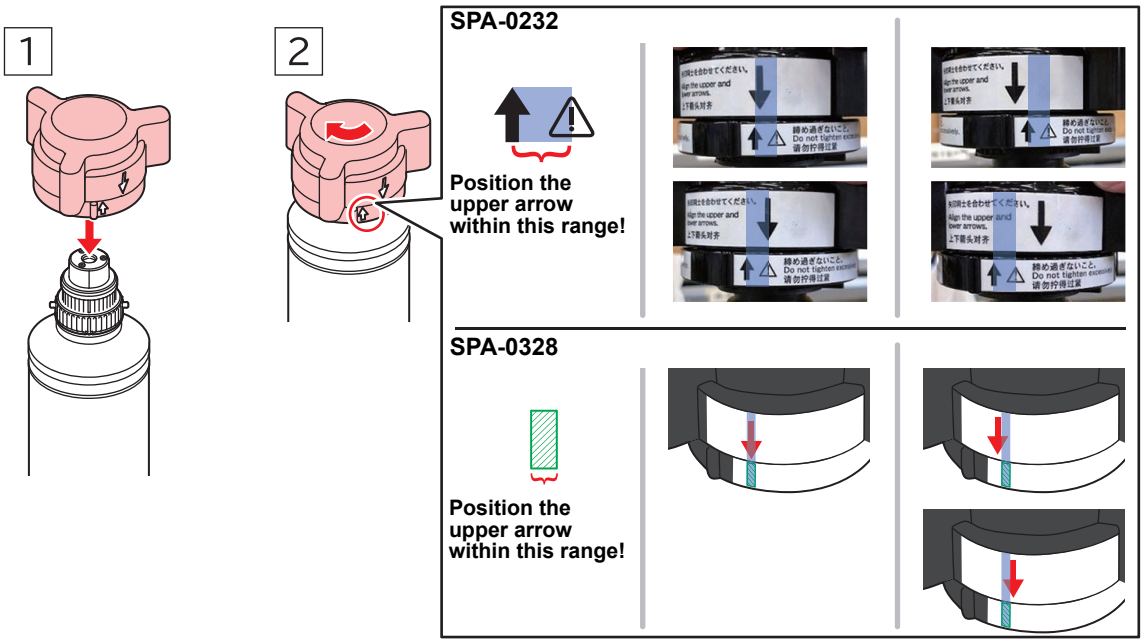

Caution

- Do not overtighten the special cap. Disregarding this precaution may result in damage, idling or ink leakage. If the arrow moves beyond the above range, loosen the special cap, and repeat the steps again.

(3) Turn the bottle upside-down and check that ink does not leak.

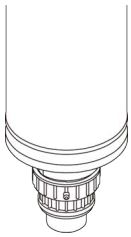

Important!

- Do not leave an ink bottle with the specialized cap attached in a location where it is exposed to light for a long period of time. Doing so can result in the ink in the bottle curing (hardening).

4 Set the ink bottle on the tank.

- Set the ink bottle while moving the lever on the tank completely to the right.

Important!

- Do not ever rotate the ink bottle at all after setting it into the tank.
  Doing so can result in ink leakage.

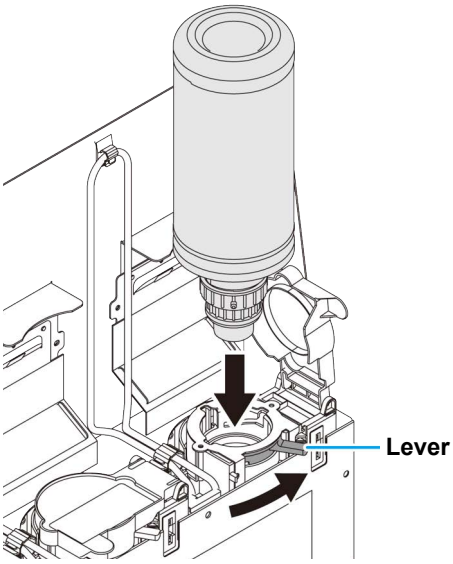

5 Move the lever on the tank completely from the right to the left side.

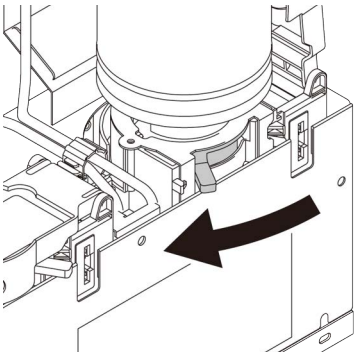

6 Insert the IC chip.

- Insert the IC chip with the left side with metal upward. If you insert the wrong side by accident, it causes faulty or damage of the IC chip.
- Do not touch the metal part of the IC chip. It may break the IC chip by static, or may cause read error by stain or flaw.
- For the setting orders of the ink bottles, refer to P.6-4.

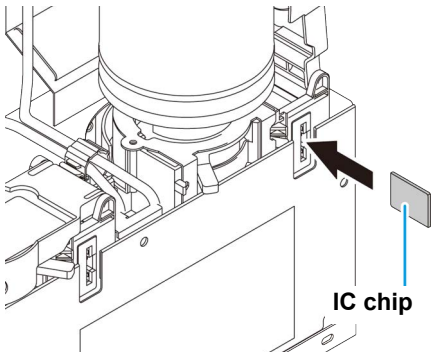

Important!

About IC chip

- The IC chip has information of ink color, remaining amount of ink, expiration data, etc.
  When setting the ink bottle, insert the IC chip packed with the ink bottle into the IC chip inserting port attached with the ink cover.
- If you set the IC chip not being the pair of the ink bottle, image quality defect etc. may occur.
- The mark indicating color information is pasted on the IC chip.

Ink color and indication mark

Ink color	Indication mark
Black	● (one black circle)
Cyan	● (one blue circle)
Magenta	● (one red circle)
Yellow	● (one yellow circle)
Ligth cyan	●● (one blue circle)
Light magenta	●● (one red circle)
White	○ (one white circle)
Clear	○○ (two white circles)
Primer	○○○ (three white circles)

IC chip

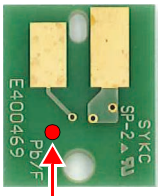

Mark indication position

Replace the ink bottle

Perform as follows when [INK END] or [INK NEAR END] is displayed on the display.

Caution

- Check for dust or debris on the cap before setting the bottle. If any paper or dust adheres to the cap, it may cause a clogged path defection.

● When [INK END] is displayed

1 **Move the lever on the tank completely from the left to the right end.**

Important!

- Do not ever rotate the ink bottle at all after setting it into the tank. Doing so can result in ink leakage.

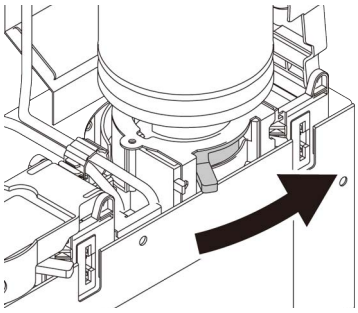

2 **Lift out the ink bottle while keeping it completely straight.**

Important!

- Check that the light-blocking cover closes when removing the ink bottle from the tank. Close by hand if the cap does not close. Leaving the light-blocking cover open can result in the ink curing.

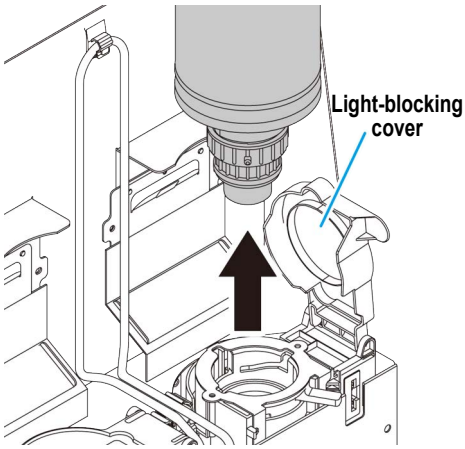

3 Wipe off any ink adhering to the cap.

(1) Wipe off any ink adhering to the undersurface of the cap using the cap wiper section on the rear of the tank.

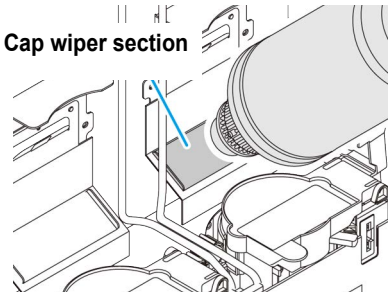

(2) Set the bottle with cap upright and use a disposable wipe or similar item to wipe off any ink adhering to the cap.

4 Remove the cap from the used ink bottle.

- Use the tightening jig to remove the cap if it is difficult to remove.

5 Refer to P.1-9 “Ink bottles” to set the new ink bottle.

Important!

- Do not leave an ink bottle with the specialized cap attached in a location where it is exposed to light for a long period of time. Doing so can result in the ink in the bottle curing.

● When [INK NEAR END] is displayed

There is a little of ink left. It is recommended to replace the ink bottle soon since ink may become empty in printing while printing is continuously enabled.
When you press the ENTER key in LOCAL, you can check the bottle to be replaced in the local guidance. (☞ P.3-30)

If the light-blocking cover comes off

If the light-blocking cover comes off, light striking the inside of the tank can result in the ink curing.
Perform the following procedures if the light-blocking cover comes off.

1 **Insert the nub (on one side) of the light-blocking cover into the hole on the tank.**

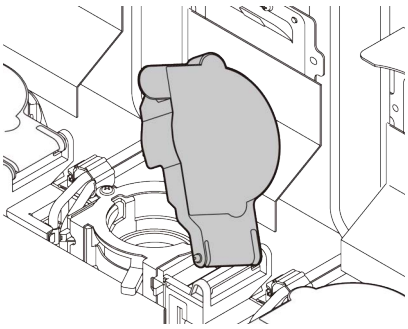

2 **While pressing towards the side of the inserted hole of Step 1, insert the other nub into the other side.**

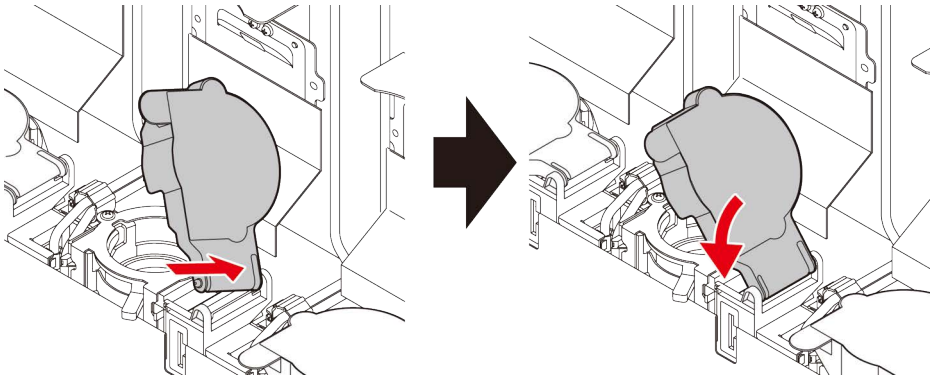

For Ink bottle lamps

The condition of the ink bottles set in the machine is confirmable with lamps located over the ink bottles.

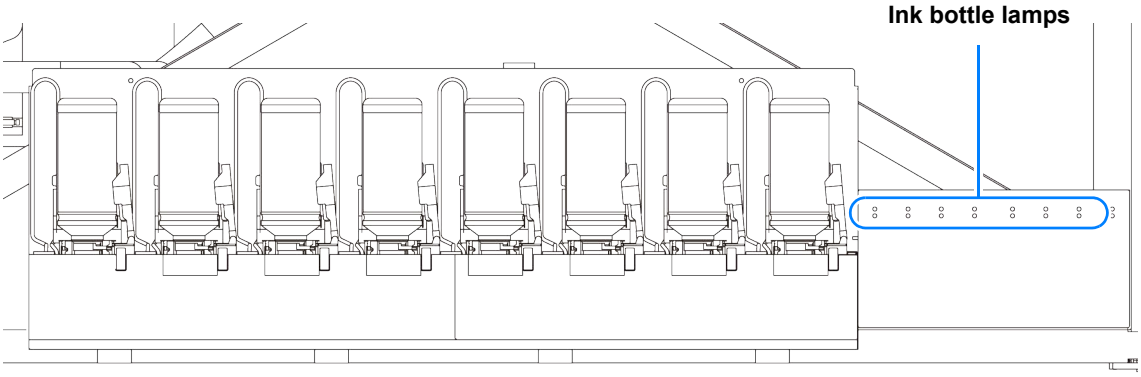

Condition of Ink bottle lamp	Description
OFF	No error
Blinks in red.	There is less ink in the ink bottle (Near End). Or, one month has passed from the expiration date of ink. It will become unusable soon.
Lights in red.	There is no ink in the ink bottle, or the ink bottle cannot be used due to other ink error. (☞ P.5-4)
Blinks in red (fast).	As two months have passed from the expiration date of ink, you cannot use the ink bottle.
Lights in green.	Indicates that ink is supplied. When you use 4-color ink set, this machine first supplies ink from the ink bottle whose ink expires soon.
Blinks in red and green alternately.	It blinks in red and lights in green alternately.

Ink usage restrictions

The ink expiration date is indicated on the Ink bottle. Expired ink may cause printing defects or alter the color tone. Printing is possible even if the ink has passed its expiration date. Nevertheless, we recommend replacing with new ink or use up as quickly as possible.

Ex.) The expiration date is April 2020
May : Replace with new ink or use up as quickly as possible. Printing is possible.
June : Replace with new ink or use up as quickly as possible. Printing is possible.
July : Replace with new ink. Printing will be unavailable soon.

- The message appears on the display.

About ink end and ink near end

When it becomes Ink near end (remaining amount of ink is less), the ink bottle lamp blinks in red to inform you of it. It is recommended to replace it with new one as soon as possible.
When it becomes Ink end (remaining amount of ink is none), the ink bottle lamp lights in red to inform you of it. Replace the ink bottle.

Caution in handling of ink bottles

- If you get ink in your eyes, immediately wash your eyes with a lot of clean running water for at least 15 minutes. In doing so, also wash the eyess to rinse ink away completely. Then, consult a doctor as soon as possible.
- Use genuine ink bottles for this machine. This machine functions by recognizing the genuine ink bottles. In case of troubles caused by modified ink bottles or the like, it shall be out of the warranty even within the warranty period.
- Store the ink bottle in a place not more than 1 m off the ground. If you store it in a place higher than 1 m, should the ink bottle fall, the cap may come off, spilling the ink.
- If the ink bottle is moved from a cold place to a warm place, leave it in the room temperature for three hours or more before using it.
- Make sure to store ink bottles in a cool and dark place.
- Store ink bottles and waste ink tank in a place that is out of the reach of children.
- Request an industrial waste processor for processing of empty ink bottles.
- Be sure to thoroughly consume the ink in the ink bottle, once it is opened, within three months. If an extended period of time has passed away after opening the ink bottle, printing quality would be poor.
- Do not shake ink bottles violently. This may result in ink leakage from the ink bottles.
- Never refill the ink bottles with ink. This may result in troubles.
  MIMAKI will not bear any responsibility for any damage caused by the use of the ink bottles refilled with ink.
- Do not touch or stain the contacts of the IC chip. This may cause damages on printed circuit boards.

Caution

- The shape of an ink bottle installed in the machine might collapse as shown in the figure on the right. This is normal, and does not affect the use or operation of the machine.

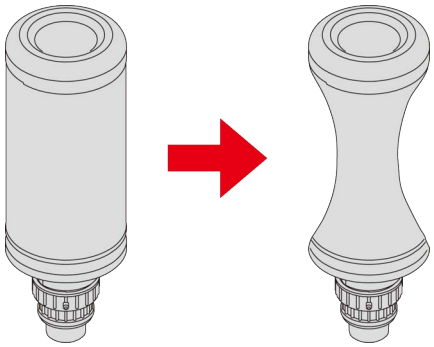

Media

Usable media sizes and notes for handling are described.

Usable sizes of media

Model	JFX200-2513
Maximum width	2,580 mm (101.6 in)
Maximum length	2,040 mm (80.3 in)
Maximum printing width	2,500 mm (98.4 in)
Thickness	50 mm or less (1.97 in or less)
Weight *1	162 kg or less (357.1 lb or less)

*1. A rough guide is 50 kg (110.2 lb) per 1 m^2.

Caution in handling of medias

Pay attention to the followings for handling of medias.

Important!

- **Extension and shrinkage of the media**
  Do not use the media in the sheet form shortly after the package was opened. The media could extend or shrink depending on the temperature and humidity inside the room. Over 30 minutes after opening of the package, the media has to be exposed to the ambient air of the location it is to be used.
- **Warping of the media**
  As for the media of the sheet form, use the flat one, or the one warping downward (the one with floating central part when placed the printing surface facing upward.) The media warping upward could not be absorbed in some cases onto the table. Store the media liable to be warped on the slightly smaller platform or palette so that it may warp downward.
  Be careful not to warp the media out of the absorption area.
- **Absorption of the media**
  To maintain the absorption effect, cover the suction holes not covered by the media with other media which is thinner than the media.
- **Other precautions**
  a Do not place any article on the surface of the coated paper. Some coated paper could change its color.
  b Curled media that cannot be absorbed or the media that misaligns when the Y-bar is moved may not be used. Before using, fix the media with adhesive tape, etc.
  c Do not use the media that will generate warping or deformation even if the logical seek is set “OFF”.
  d As the bed surface is constructed of multiple boards, their joint lines could be reflected on the printed images depending on the thickness and elasticity of the media. Similarly, the suction holes could affect the printed images. Perform the printing after confirming that there is no problem by making the test printing in advance.

Chapter 2
Basic Operations

This chapter

describes procedures and setting methods for ink and media preparation, and printing.

Workflow 2-2
Turning the Power ON/OFF 2-3
Turning the Power ON 2-3
Turning the Power OFF 2-4
Setting a Media 2-5
Setting the Media 2-5
Move the irradiation position of the UV lamp 2-8
Best-suited position of UV lamp according to printing 2-8
Positioning method of UV lamp 2-12
Test Printing 2-13
Test Printing 2-14
Head Cleaning 2-15
About head cleaning 2-15
Perform head cleaning depending on the test printing result 2-15
Printing Data 2-16
Starting a Printing Operation 2-16
Stopping a printing operation halfway 2-17
Deleting Received Data (Data Clear) 2-17
Move the Y-bar 2-18

Workflow

1	Turning the Power ON/OFF	Referring to “Turning the Power ON/OFF” (☞ P.2-3).
2	Setting a Media	Referring to “Setting a Media” (☞ P.2-5).
3	Move the irradiation position of the UV lamp	Referring to “Move the irradiation position of the UV lamp” (☞ P.2-8).
4	Test Printing	Referring to “Test Printing” (☞ P.2-13).
5	Head Cleaning	Referring to “Head Cleaning” (☞ P.2-15).
6	Printing Data	Referring to “Printing Data” (☞ P.2-16).

Turning the Power ON/OFF

Turning the Power ON

1 **Push the power button.**

- Push the power button located on the left side of the operation panel.

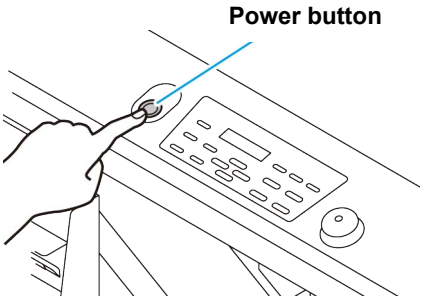

- The firmware version is displayed when the power is turned ON.
- The machine performs its initial operation.

```
JFX200        Start-up
Ver  1.00
```

2 **The machine enters LOCAL.**

```
<LOCAL>
```

3 **Turn ON the power of the connected PC.**

- You should normally leave the machine plugged into the power source outlet. Leaving the machine unplugged can result in clogging of the head nozzle. Depending on the symptoms, it might be difficult to remedy the fault.

Turning the Power OFF

When having ended the operation of the machine, turn the power OFF by pressing the power button located on the front side.
Check the following items when turning the power OFF.

- If the machine is receiving data from the PC or if there is any data that has not been output yet
- If the head has returned to the capping station
- If any error has occurred （☞ P.5-12 “Error messages”）

1 **Turn OFF the power of the connected PC.**

2 **Push the power button to turn the power OFF.**

- The power supply button goes out.
- To use this machine again, light the green lamp by pressing the power button.

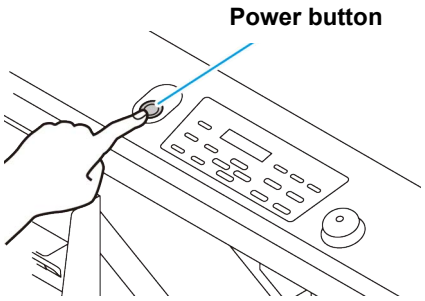

Cautions about Turning the Power OFF

● Do not unplug from the power outlet.

Leave plugged into the power outlet and periodically turn the power on so that the nozzle clogging prevention function (flushing function) and the pressure adjusting function operate.
If not plugged into the power outlet, the auto maintenance functions, such as flushing, do not operate, and this may cause nozzle clogging.

● Turn the power OFF after having checked the position of the head.

If the power is turned OFF in a state where the head has not returned to the capping station, the head dries, which may cause nozzle clogging.
In this case, turn the power ON again and check that the head has returned to the capping station, and then turn the power OFF.

● Do not turn the power OFF during printing.

The head may not return to the capping station.

● After having turned the power button OFF, remove the power cable from the outlet.

When turning off the main power switch to move the machine or for countermeasure against the error of the machine, be sure to push the power supply button on the operation panel. Check that the lamp went out, and remove the power cable from the outlet.

● Even if you press the emergency switch, the power supply is not turned off.

The emergency switch is to stop the machine when the situation requires emergency stop. Even if you press the emergency switch, you cannot turn off the power supply.

Setting a Media

This machine can be used with a leaf media.
For usable medias, refer to P.1-18 “Usable sizes of media”.

Setting the Media

Important!

- If, within the absorption area, there are suction holes not closed by the media, close such suction holes placing thin sheet form material such as paper, film or tape.
- The peripheral parts of the media could roll up due to heat. Fix the media supplementarily using adhesive tapes, etc.
- There are guide holes into which the attached positioning pin is inserted at the edge of the table (two sides of upper and lower of the table). Use them as the guides for setting the media straight. (☞P.2-7)

1 **Switch over the suction valve at the front of the table adjusting with the size of the media to be set.**

- The valve is opened when the knob is turned horizontally and closed when it is turned vertically.

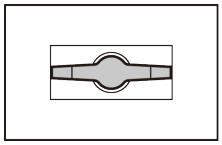

Open

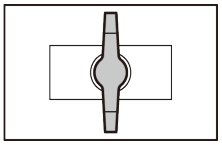

Close

2 **Press the VACUUM key to light the “VACUUM” lamp and vacuum the media.**

- As for the details of the absorption area, please refer to P.2-6.

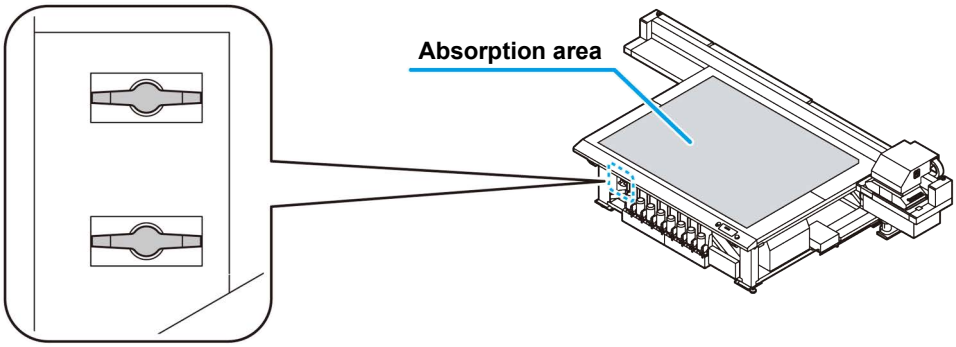

Suction valve

After setting the media, set the followings.

- Register the thickness of the set media. (☞ P.3-4)
- Register the head gap. (☞ P.6-2)

Caution

Since the table may bend, please refer the following manner.

- Do not drop the heavy media to the table.
- Do not concentrate the weight on one point (up to 50kg / m2). (☞ P.6-2)

On the absorption area

The absorption area of JFX-2513 is shown in the following figure.

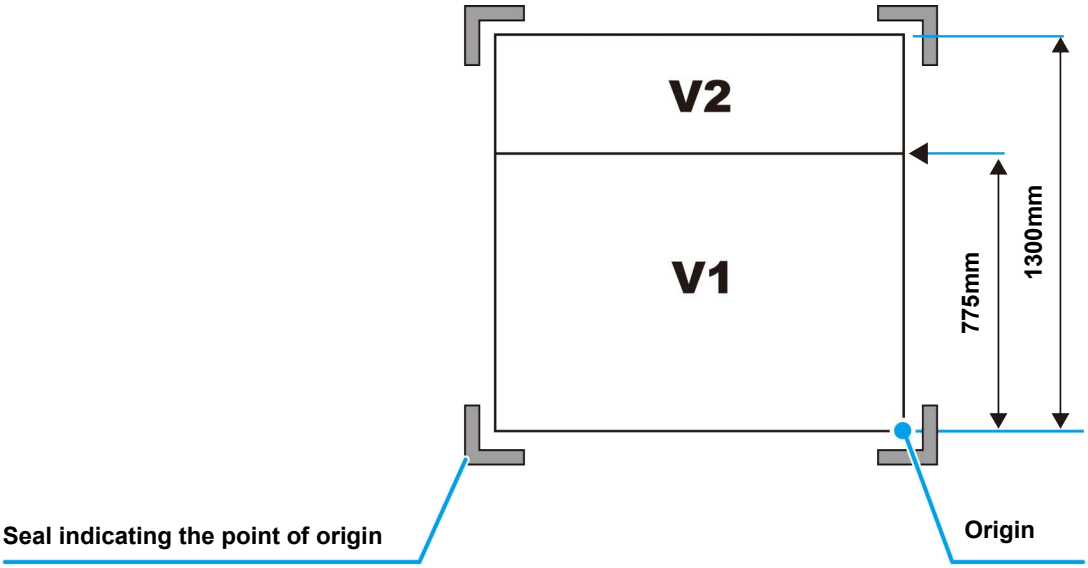

- When changing the point of origin, please refer to P.3-2 .

About the media guide hole

There are guide holes into which the attached positioning pin is inserted at the edge of the table (two sides of upper and lower of the table). Use these as a guide to set the media straight.

- You can attach the M3 screw in the marketplace instead of the attached positioning pin. In this case, you can attach the screws in two locations at the left and front of the table.

Important!

- If you use the attached positioning pin, you cannot use the media of 5mm thickness and below.
- If you print onto media that is not more than 5 mm thick, make sure that the positioning pin has been removed from the table.

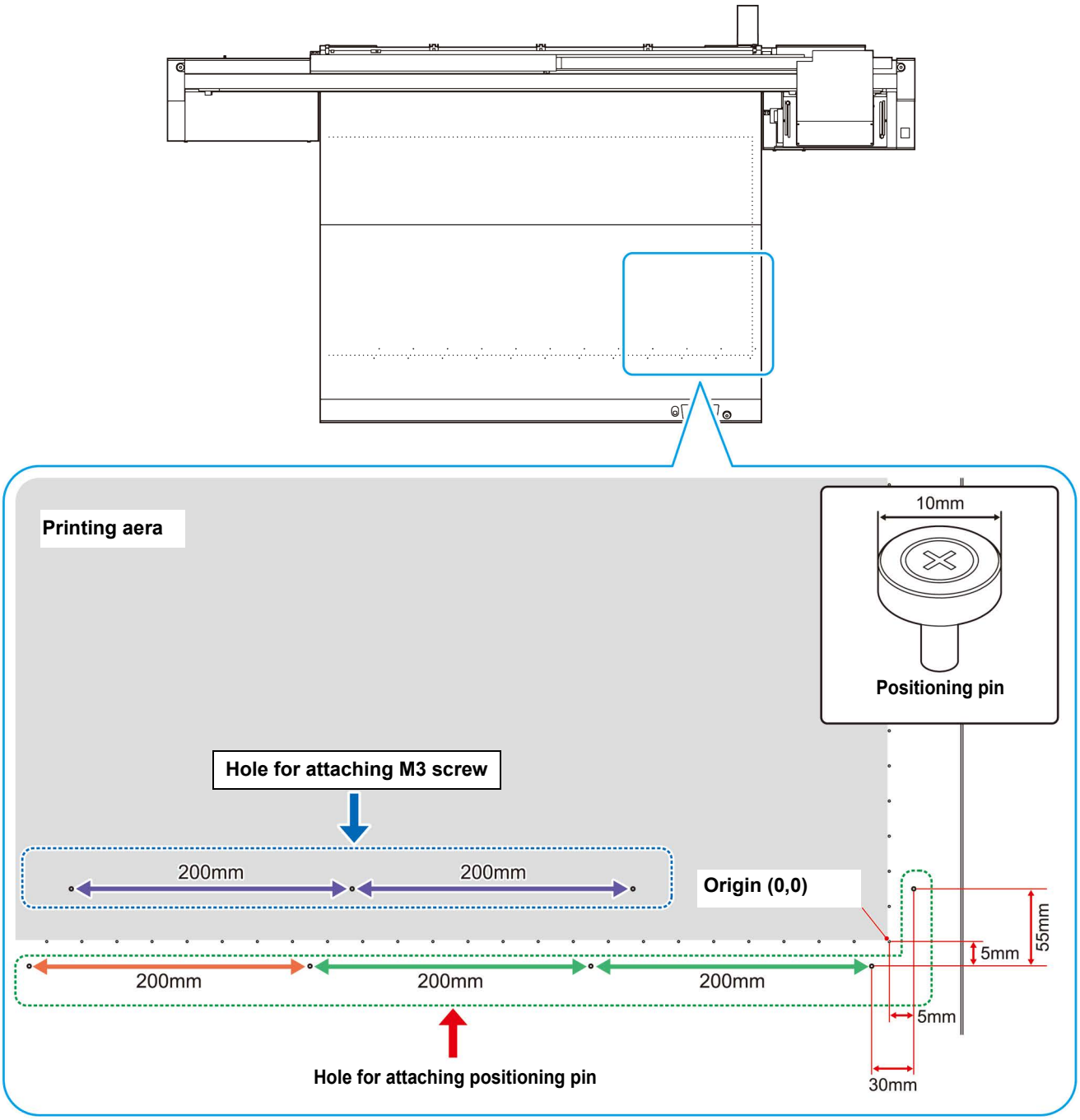

Move the irradiation position of the UV lamp

When printing with this machine, it is necessary to move the LED UV position according to ink to use (color ink/ special color ink).

This machine provides three printing methods:

- **Single-layer printing: printing color ink layer on media**
- **Two-layers printing: printing special color ink (white or clear or primer) layer on color ink layer**
- **Two-layers printing: printing color ink layer on special color ink layer**
- **Two-layers printing: printing special color ink layer on special color ink layer**
- **Three-layers printing: A color ink layer is overlaid on the special color ink layer, and a special color ink layer is overlaid thereon**

Best-suited position of UV lamp according to printing

This machine is equipped with four UV lamps around the head unit as below.
Depending on the printing method, move the UV lamp.For details, please refer to “Print condition and UV lamp position list” below.Move the lamp position where “* 1” is attached to “lamp position” in the list.

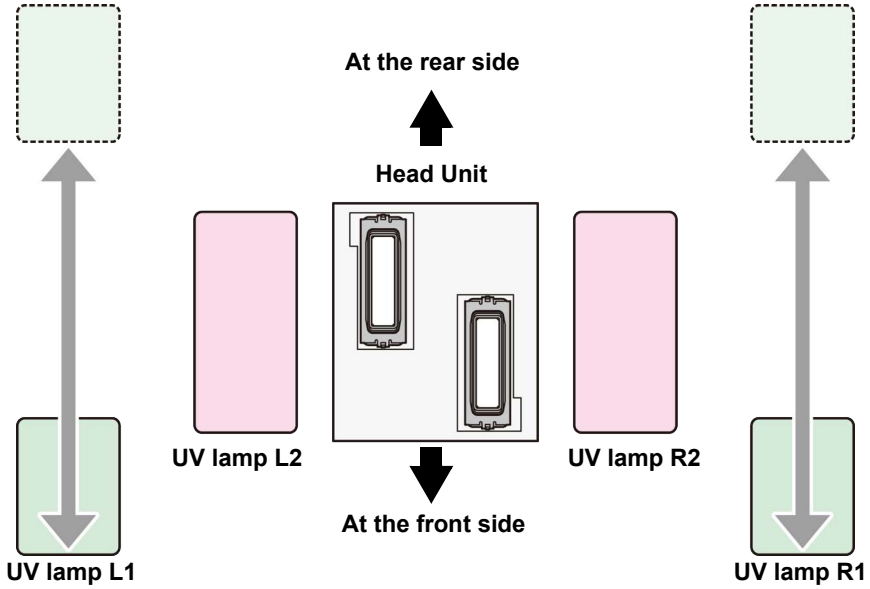

Print condition and UV lamp position list

Ink type	Ink set	Printing method			
		Print layer	Ink layer	Image	lamp position(mm)
LH-100	4C (M M K K C C Y Y)	Single-layer	CMYK	M K C Y	65
	4C+W (M K C Y M C W W)	Single-layer	CMYK	M K C Y	120
			W	W	65
		Two-layers	W CMYK	W M K C Y	65 65
			CMYK W	M K C Y W	65 65
	4C+WClPr (M K C Y Cl Cl W W)	Single-layer	CMYK	M K C Y	120
			W	W	65

Ink type	Ink set	Printing method			
		Print layer	Ink layer	Image	lamp position(mm)
LH-100	4C+WClPr (M K C Y Cl Cl W W)	Two-layers	Cl CMYK	Cl M K C Y	0 0
			Cl W	Cl W	0*1 65
	4C+WClPr (M K C Y Cl Cl W W) (M K C Y Cl Pr W W)*2	Single-layer	Cl	Cl	0
			Pr	Pr	0
		Two-layers	W Pr	W Pr	65*1 0
			CMYK Pr	M K C Y Pr	65 65
			Cl Pr	Cl Pr	0 0
		Three-layers	Cl CMYK W	Cl M K C Y W	0*1 65 65
			Cl CMYK Pr	Cl M K C Y Pr	0 0 0
			W CMYK Pr	W M K C Y Pr	65 65*1 0
			CMYK W Pr	M K C Y W Pr	65 65*1 0
LUS-120	4C (M M K K C C Y Y)	Single-layer	CMYK	M K C Y	0
	4C+W (M K C Y M C W W)	Single-layer	CMYK	M K C Y	0
		Two-layers	W CMYK	W M K C Y	0 0
			CMYK W	M K C Y W	190 190
	4C+WCl (M K C Y Cl Cl W W)	Single-layer	CMYK	M K C Y	0
			W	W	0
			Cl	Cl	0
		Two-layers	Cl CMYK	Cl M K C Y	0 0
			Cl W	Cl W	0 0
		Three-layers	Cl CMYK W	Cl M K C Y W	0 0 0

2

Basic Operations

Ink type	Ink set	Printing method			
		Print layer	Ink layer	Image	lamp position(mm)
LUS-150	4C (M M K K C C Y Y)	Single-layer	CMYK	M K C Y	0
	4C+W (M K C Y M C W W)	Single-layer	CMYK	M K C Y	0
		Two-layers	W CMYK	W M K C Y	0 0
			CMYK W	M K C Y W	65 65
	6C+W (M K C Y Lm Lc W W)	Single-layer	CMYKLmLc	M K C Y Lm Lc	0
		Two-layers	W CMYKLmLc	W M K C Y Lm Lc	0 0
			CMYKLmLc W	M K C Y Lm Lc W	65 65
	4C+WClPr (M K C Y Cl Cl W W) (M K C Y Cl Pr W W) *2	Single-layer	CMYK	M K C Y	0
			W	W	0
			Cl	Cl	0
			Pr	Pr	0
		Two-layers	Cl CMYK	Cl M K C Y	0 0
			Cl W	Cl W	0*1 65
			W Pr	W Pr	65*1 0
			CMYK Pr	M K C Y Pr	65 65
			Cl Pr	Cl Pr	0 0
		Three-layers	Cl CMYK W	Cl M K C Y W	0*1 65 65
			Cl CMYK Pr	Cl M K C Y Pr	0 0 0
			W CMYK Pr	W M K C Y Pr	65 65*1 0
			CMYK W Pr	M K C Y W Pr	65 65*1 0

Ink type	Ink set	Printing method			
		Print layer	Ink layer	Image	lamp position(mm)
LUS-200	4C (M M K K C C Y Y)	Single-layer	CMYK	M K C Y	0
	4C+W (M K C Y M C W W)	Single-layer	CMYK	M K C Y	0
		Two-layers	W CMYK	W M K C Y	0 0
			CMYK W	M K C Y W	65 65
LUS-350	4C+W (M K C Y M C W W)	Single-layer	CMYK	M K C Y	0
		Two-layers	W CMYK	W M K C Y	0 0
			CMYK W	M K C Y W	190 190

*1. The lamp position should be above setting when you priotize the image quarity, and the lamp position need to be changed. (The machine suspend before printing clear ink and the alarm will be shown on RasterLink.)
If you can not change the lamp position during the print, please set the lamp position at 0mm BEFORE printing.

*2. Because Pr and Cl are mounted on the same head, those cannot be printed as one job.

Positioning method of UV lamp

This part explains the method to move the UV lamp for right and left of the carriage.
Loosen the screw of the lamp you move, slide it.

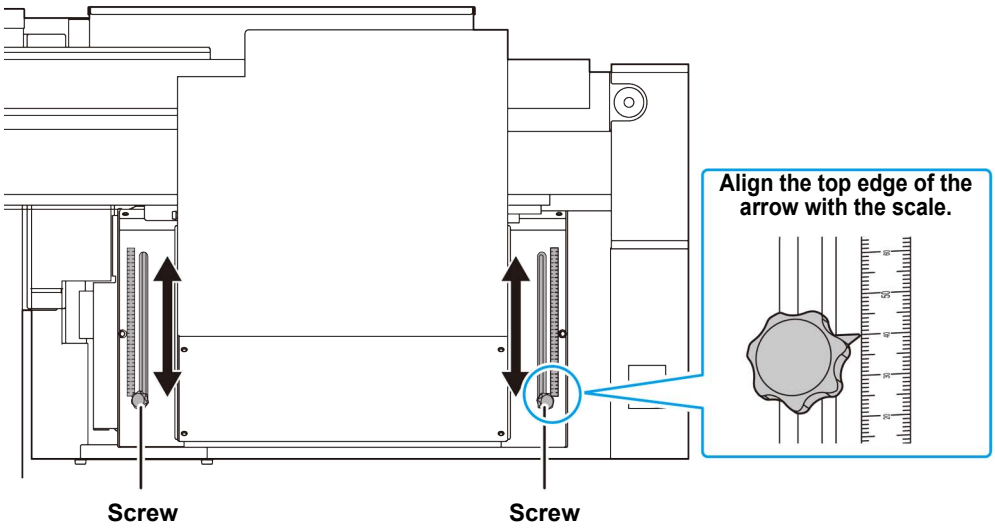

Caution

- Be careful not to drop foreign object into the groove for moving the UV lamp. If metal substance such as a screw may drop there, it may cause ignition.

Test Printing

Print a test pattern to check that there are no discharging defects such as nozzle clogging (slight touching of ink or nozzle missing).
The relations between head row and test pattern print position are as follow.

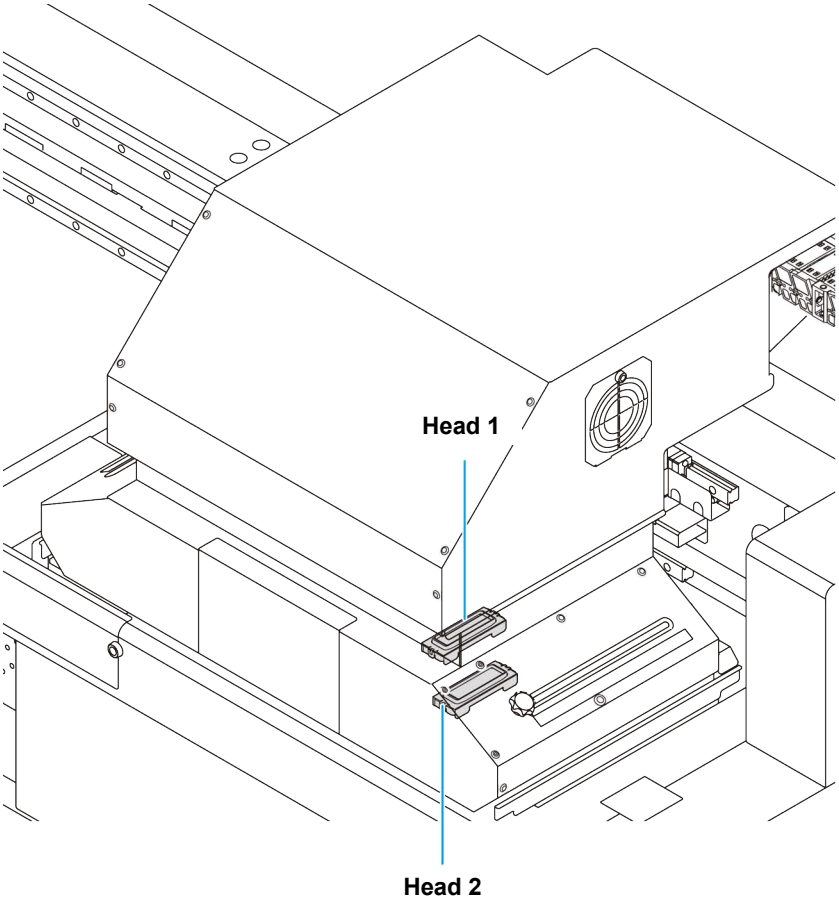

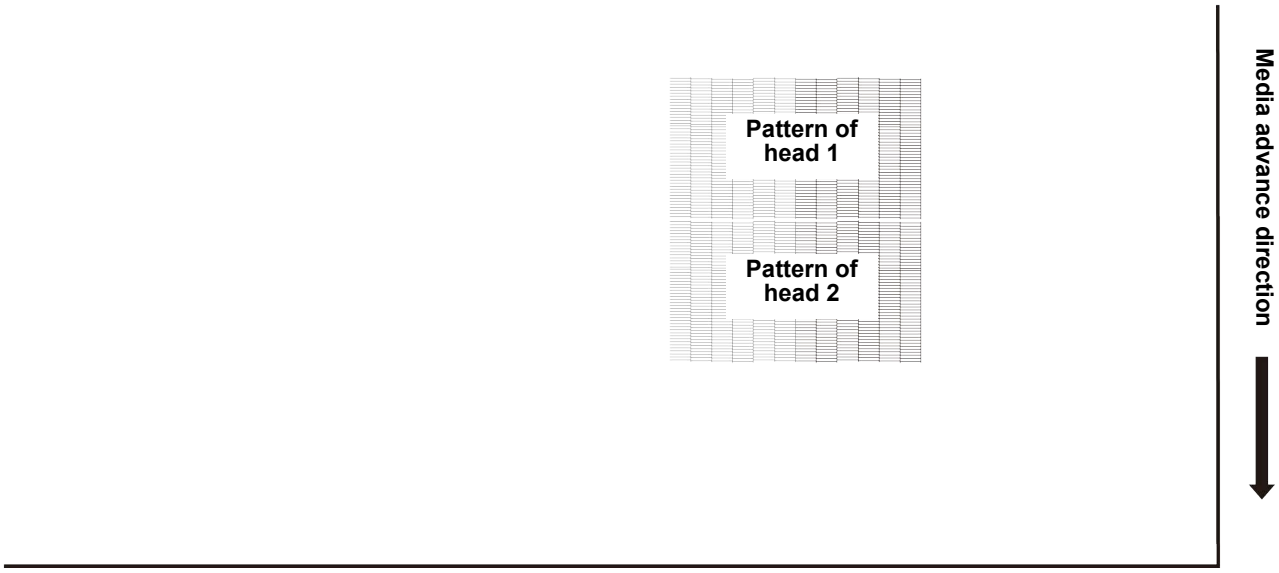

Test Printing

Print a test pattern to check that there are no discharging defects such as nozzle clogging (slight touching of ink or nozzle missing).

In addition, you can select the orientation of the test pattern to print from two types in order to perform test printing repeatedly. Select one depending on your use.

Check before test printing.	
• If a media has been set (☞ P.2-5)	• If the origin position has been set
• If the head height has been adjusted (☞ P.3-6)	

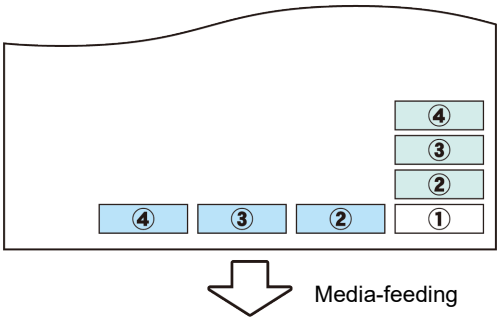

: When the set value is "FEED DIR."

: When the set value is "SCAN DIR."

1 **Press the (TEST) key in LOCAL.**

• Press (▲) (▼) to change the test pattern orientation.

```
TEST PRINT
(FEED DIR.)      [ENT]
```

2 **Press the (ENTER) key.**

3 **Press (▲)(▼), to select NOZZLE RECOVERY function ON/OFF.**

```
TEST PRINT
NOZZLE RECOVERY  :ON
```

Important! • Operation of this procedure can not be set if the nozzle recovery of maintenance function is not registered or a “CONFIRM MENU” of nozzle recovery is OFF.

4 **Press the (ENTER) key.**

• Test printing starts.

```
** PRINTING **
PLEASE WAIT
```

• When the printing has been completed, the screen returns to step1.

```
TEST PRINT
(FEED DIR.)      [ENT]
```

5 **Check the printed test pattern.**

• When the result is normal, end the operation.
• When the result is abnormal, perform head cleaning. (☞ P.2-15)

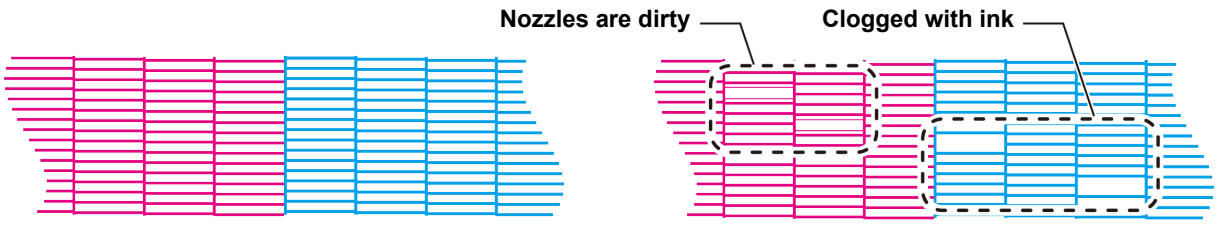

Normal pattern　　Abnormal pattern

Head Cleaning

About head cleaning

Check the printed test pattern result and perform cleaning depending on the status.
Select one from the three types below:

SOFT : When lines are bent, when any line is missing
NORMAL : When any line is missing, when colors are mixed
HARD : When poor image quality cannot be improved even by NORMAL or SOFT cleaning

Perform head cleaning depending on the test printing result

There are three types of head cleaning. Use one by checking the test pattern.

1 **In Local, Press the (CLEANING) key.**

```
CLEANING
SOFT                [ENT]
```

2 **Press (▲)(▼) to select the cleaning type.**

```
CLEANING
NORMAL              [ENT]
```

SOFT : When lines are bent, when any line is missing
NORMAL : When any line is missing, when colors are mixed
HARD : When poor image quality cannot be improved even by NORMAL or SOFT cleaning

3 **Press the (ENTER) key.**

```
SELECT HEAD
:12
```

4 **Press (▲)(▼) to select a head to cleaning.**

```
SELECT HEAD
:1_
```

• Set Value : 12 (Cleaning all heads.)
1_ (Head 1)
_2 (Head 2)

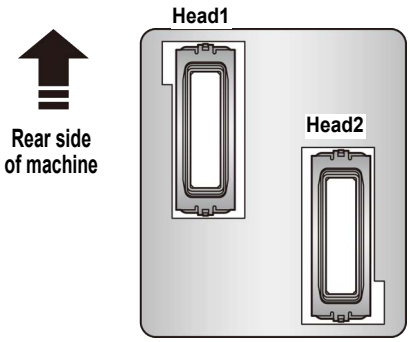

5 **Press the (ENTER) key.**

```
** CLEANING **
PLEASE:WAIT
```

6 **Perform test printing again, and check the result.**

• Repeat the cleaning and the test printing until the printing result becomes in normal.

When the image quality is not improved after the head cleaning.
• Clean the wiper and ink cap. (☞ P.4-5)
• By referring to "NOZZLE RECOVERY: When nozzles missing can not be improved at specific points, other good nozzles can be used as alternatives for printing.", set the nozzle recovery (☞ P.4-26).

Starting a Printing Operation

1 Setting a Media (☞ P.2-5)

(1) Open/Close the suction valve adjusting to the media size.
(2) Press the VACUUM key to light the VACUUM lamp and vacuum the media.

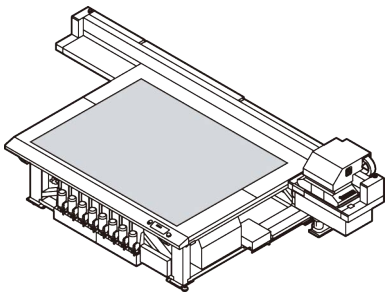

2 Press the REMOTE key in LOCAL.

- The screen changes to REMOTE, and data can be received from the PC.

3 Transmit data to be printed from the PC.

- The printing conditions are displayed.
- For the method of data transmission, see the instruction manual for the output software.

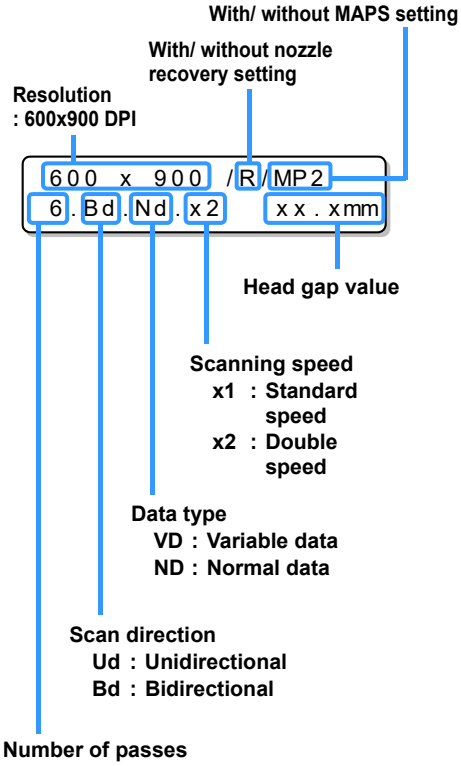

4 Start printing.

5 Taking out the media after completion of printing

(1) Follow the "Move the Y-bar" (☞P.2-18) to evacuate the Y-bar from the table.
(2) Press the VACUUM key to turn the suction OFF.
(3) Remove the media.

Important!

- During printing, media may be heated by the LED UV and raised, causing printing to be interrupted. In this case, set new media and restart printing.

Stopping a printing operation halfway

Perform the following operation when stopping a printing operation halfway.

1 **Press the (REMOTE) key during printing.**

```
<LOCAL>
     DATA REMAIN
```

- The printing operation stops.
- Interrupt data sending at the PC side during the data is sent from the PC.
- Printing restarts from the interrupted data by repressing the (REMOTE) key.

Deleting Received Data (Data Clear)

When you want to stop printing, delete the already received data.

1 **Press the (DATA CLEAR) key in LOCAL.**

```
DATA CLEAR
                [ENT]
```

2 **Press the (ENTER) key.**

```
  ** DATA CLEAR **
```

- The received data is erased then it returns to the Local.

Move the Y-bar

When you wish to check the printing results etc., you can move the Y-bar.
Set the evacuation position (view position) of the Y-bar in advance.

Setting the view position

1 **Press the (FUNCTION) key in LOCAL.**

```
FUNCTION
VIEW                [ENT]
```

2 **Press the (ENTER) key.**

```
VIEW
START               [ENT]
```

3 **Press (▼).**

```
VIEW
SET VIEW POS        [ENT]
```

4 **Press the (ENTER) key.**

```
SET VIEW POS
=            ****  mm
```

5 **Set the moving position by pressing the (▲) or (▼) keys.**

- If you press (▲) key, the Y-bar will move to the back of the table centering the origin.
- If you press (▼) key, the Y-bar will move to the front of the table centering the origin.

```
SET VIEW POS
=             500  mm
```

6 (ENTER) **Press the (ENTER) key.**

- The value is set, and the screen returns to Step 2.

```
  **MOVING NOW**
    PLEASE WAIT
```

Evacuation of Y-bar from the table

1 **Press the (FUNCTION) key in LOCAL.**

```
FUNCTION
VIEW                [ENT]
```

2 **Press the (ENTER) key.**

```
VIEW
START               <ent>
```

3 **Press the (ENTER) key.**

- The Y-bar moves.

```
  **MOVING NOW**
    PLEASE WAIT
```

Chapter 3
Extended Functions

This chapter

describes the operation procedures for using the machine more conveniently and each setting procedure.

Changing origin 3-2
Changing origin with JOG keys 3-2
Changing origin with FUNCTION menu 3-3
Registering the thickness of the media 3-4
Register the thickness of the media manually.... 3-4
Adjust head gap with the or keys 3-4
Measuring the thickness of the media automatically 3-5
Registering Head gap value 3-6
List of Functions 3-7
Correct the ink drop position for bidirectional printing 3-8
PatternCorrect dot position 3-8
Setting Logical Seek 3-10
Setting UV mode 3-11
Perform setting to reduce stripes between passes 3-12
What is the MAPS Function? 3-12
Setting MAPS1 Function 3-12
Setting MAPS2 Function (4 color) 3-13
Setting MAPS2 Function (4 color + special color ink) 3-14
Setting Work Change 3-17
Setting Ionizer 3-18
Setting Auto Cleaning 3-19
Setting nozzle face cleaning time 3-20
Other Settings 3-21
Machine Settings 3-22
Setting a AUTO Power-off 3-22
Setting Time 3-23
Setting Units 3-24
Setting a KEY BUZZER 3-25
Setting a LANGUAGE 3-26
Initializing the Settings 3-27
Confirming Machine Information 3-28
Check the using status of the machine 3-28
Check the machine version information 3-29
Displaying the Information of this machine . 3-30

Changing origin

The default origin position can be changed.
There are following 2 changing methods.

Changing with the JOG keys

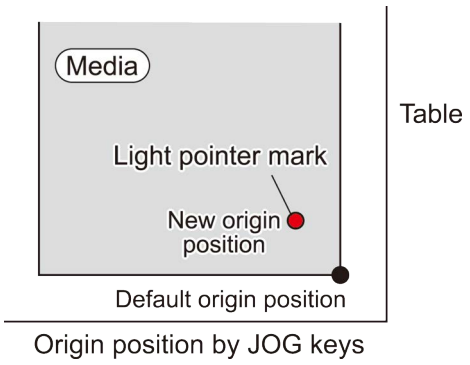

Changing with the ÅgORIGINÅh in the FUNCTION menu

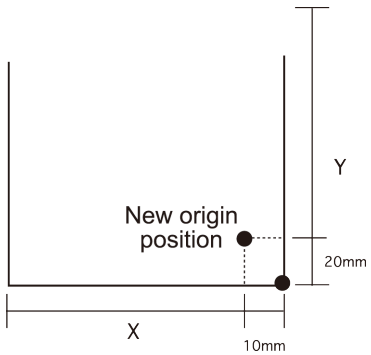

Changing origin with JOG keys

1 **Press ▲ ▼ ◀ ▶ in the local.**

- The origin setting mode starts
- A red light pointer mark [●] is projected on the table or the media.

```
ORIGIN SET UP
0.0     ----
```

2 **Move the light pointer mark by pressing ▲ ▼ ◀ ▶.**

- Move the light pointer mark to the position to set a new origin.

```
ORIGIN SET UP
500.0   600.0
```

Origin position (back and forth) **Origin position (right and left)**

3 **Press the ENTER key when the printing origin is determined.**

- The origin is changed.

```
** ORIGIN **
```

Important!

- The setting value for the origin set with the JOG keys is cleared by cutting the power.

Changing origin with FUNCTION menu

To precisely set the origin of coordinates, set its X- and Y- coordinates from the FUNCTION menu. This setting value becomes the origin position (0, 0).

1 **Press the (FUNCTION) key in LOCAL.**

```
FUNCTION
VIEW                [ENT]
```

2 **Press (▲)(▼) to select [ORIGIN] and press the (ENTER) key twice.**

- X-axis offset value setting screen is displayed.

```
ORIGIN    1300 mm
XOFFS  :  1200 mm
```

3 **Press (▲)(▼) to input the X offset value.**

- Setting the origin position of X-axis.

```
ORIGIN    1300 mm
XOFFS  :  1290 mm
```

4 **Press the (ENTER) key.**

```
ORIGIN
SELCT:X OFFSET
```

5 **Press (▲)(▼) to select [Y OFFSET] and press the (ENTER) key.**

```
ORIGIN
SELCT:Y OFFSET
```

6 **Press (▲)(▼) to input the Y offset value.**

- Setting the origin position of Y-axis.

```
ORIGIN    2500 mm
YOFFS  :  2090 mm
```

7 **Press the (ENTER) key.**

```
ORIGIN
SELCT:Y OFFSET
```

8 **Press the (END) key several times to end the setting.**

Important!

- The set value is not cleared by cutting the power.

Registering the thickness of the media

Register the thickness of loading media.
There are three types of registering; “Register the thickness of the media manually”, “Adjust the gap with the UP or DOWN keys”, and “Measuring the thickness of the media automatically”.

Register the thickness of the media manually

1 **Press the FUNCTION key in the local.**

```
FUNCTION
VIEW              [ENT]
```

2 **Press ▲ ▼ to select the [HEAD HEIGHT].**

```
FUNCTION
HEAD HEIGHT       [ENT]
```

3 **Press the ENTER key twice.**

```
MEDIA THICKNESS
=            2.5 mm
```

4 **Press ▲ ▼ to enter the thickness of loading media.**

• Set value : 0.0 to 50.0mm

```
MEDIA THICKNESS
=           10.5 mm
```

5 **Press the ENTER key.**

```
FUNCTION
HEAD HEIGHT       [ENT]
```

6 **Press the END key to end the setting.**

Adjust head gap with the UP or DOWN keys

1 **Press the UP or DOWN key.**

```
   ORIGIN SET UP
Z HEIGHT = 45.0
```

2 **Adjust with pressing the UP or DOWN key.**

```
   ORIGIN SET UP
Z HEIGHT = 50.0
```

3 **Press the ENTER key.**

```
   ORIGIN SET UP
HEAD GAP = 1.2mm
```

↓

```
   ORIGIN SET UP
MEDIA t = *.*mm
```

Measuring the thickness of the media automatically

Thickness of media is automatically measured with the gap pin on the left of the carriage.

1 **Set a media.**

Caution

- Be sure to set a media on the printing area. If measured automatically without media, the head can break.

2 **Press the (FUNCTION) key in the local.**

```
FUNCTION
VIEW              [ENT]
```

3 **Press (▲)(▼) to select the [HEAD HEIGHT].**

```
FUNCTION
HEAD HEIGHT       [ENT]
```

4 **Press the (ENTER) key.**

```
HEAD HEIGHT
MEDIA THICKNESS[ENT]
```

5 **Press (▲)(▼) to select the [THICKNESS CHECK].**

```
HEAD HEIGHT
THICKNESS CHECK[ENT]
```

6 **Press the (ENTER) key.**

- In preparation for the measuring, the Y-bar will move up to the top position.
- The carriage will move to the printing area.

```
**MOVING NOE**
  PLEASE WAIT
```

↓

```
THICKNESS CHECK
CHECK START       [ENT]
```

7 **Press the (ENTER) key.**

- The media thickness will be measured automatically.
- The measured thickness will be displayed.
- The carriage will move to the evacuation position and the screen returns to the one displayed in Step 5.

```
THICKNESS CHECK
   **CHECING**
```

↓

```
THICKNESS CHECK
          3.0mm
```

8 **Press the (END) key several times to end the setting.**

Important!

- Difference of automatic measure is ±0.1mm.

Registering Head gap value

Set the head gap (height from the media to the nozzle plane of the heads).
When the carriage is to move above the platen for printing or maintenance, it moves while keeping the head gap at the preset value.
The upper limit of the head gap varies with media thickness.
Available setting values: [1.2 mm to 5.0 mm] (in units of 0.1 mm / Default : 1.5 mm)

1 **Press the (FUNCTION) key in the local.**

```
FUNCTION
VIEW                [ENT]
```

2 **Press (▲)(▼) to select the [HEAD HEIGHT].**

```
FUNCTION
HEAD HEIGHT         [ENT]
```

3 **Press the (ENTER) key.**

```
HEAD HEIGHT
MEDIA THICKNESS [ENT]
```

4 **Press (▲)(▼) to select the [HEAD GAP].**

```
HEAD HEIGHT
HEAD GAP            [ENT]
```

5 **Press the (ENTER) key.**

```
HEAD GAP
=                   2.0mm
```

6 **Press (▲)(▼) to set a value of the head gap.**

- **Set value** : 1.2 to 3.0mm

```
HEAD GAP
=                   2.0mm
```

7 **Press the (ENTER) key.**

```
HEAD HEIGHT
HEAD GAP            [ENT]
```

8 **Press the (END) key several times to end the setting.**

Caution

- If a correct value is not set to the head gap value, the print quality may be deteriorated because of dropping of large ink droplets on the media at printing

How to check the value of the head gap

When you check the head gap value currently set, perform the following procedures:

Press the (ENTER) key in Local. → **Press the (ENTER) key several times to display [HEAD GAP].**
- The head gap value currently set is displayed.

List of Functions

This section describes the overview of each function to be set and set values that can be registered in user types.

Important!

- **About default "HOST" function**
  You can operate this by the setting value specified in RIP software.
  When you set to other than "HOST", it operates by that setting value, not by the instruction from RIP software.
  Depending on RIP software, there are some functions that cannot be instructed by software. In such a case, it operates by the setting value of "When no instruction from RIP exists".
- For the specifying method with the RIP software, refer to the operation manual of the RIP software.

Function name	Set value	Default	When no instruction from RIP exists *1	Outline
DROP. POS CORRECT (☞ P.3-8)	-40.0 to 0 to 40.0	0.0	———	Used to adjust the dot position in go and return printing.
LOGICAL SEEK(☞ P.3-10)	HOST/ ON/ OFF	HOST	ON	Sets the scan movable area during printing.
OVER PRINT (☞ P.3-21)	HOST /1 to 9	HOST	1	Sets the number of layers in which ink is to be applied.
UV MODE (☞ P.3-11)	HOST/ MANUAL	HOST	MANUAL	Sets the UV irradiation pattern during printing.
REFRESH (☞ P.3-21)	HOST / Lv.0 (Refresh interval long) to 3 (Refresh interval short)	HOST	Lv.3	Refreshes the print heads during printing.
MAPS (☞ P.3-12)	OFF/MAPS1/MAPS2	MAPS2	———	Perform setting to reduce stripes between passes.
MAPS (☞ P.3-12) — MAPS1 — PRINT SPEED ADJUST	-50 to +50%	0%	———	
MAPS (☞ P.3-12) — MAPS2 — AUTO				
MAPS (☞ P.3-12) — MAPS2 — MANUAL	PATTERN(1 to 7)/ Smoothing level (AUTO/ 5 to 100%)			
WORK CHANGE (☞ P.3-17)	ON/ OFF/ HOST		———	Sets the operation when printing is completed.
IONIZER (☞ P.3-18)	ON/ OFF		———	Sets the optional ionizer.
AUTO CLEANING (☞ P.3-19) — OFF, PAGE		PAGE	———	Sets the automatic cleaning operation for the head performed before printing or during printing.
AUTO CLEANING (☞ P.3-19) — PAGE INTERVAL	1 to 1000 page	3 page	———	
AUTO CLEANING (☞ P.3-19) — PAGE TYPE	NORMAL / SOFT / HARD	SOFT	———	
INTERVAL WIPING (☞ P.3-20)	ON / OFF	OFF	———	Sets the wiping operation during printing.

*1. This is the setting value to be used for printing when setting value is not specified at the RIP software (host) side, or, you give priority to the setting value at the machine side, even if you set "Host" to the type registration of this machine.

Correct the ink drop position for bidirectional printing

When the condition for printing (media thickness/head height/etc.) has been changed, perform the following operation to correct the ink drop position for bidirectional (Bi) printing and obtain the proper printing result.

PatternCorrect dot position

1 **Set a media on the machine and set a printing origin. (☞ P.2-5)**

2 **Press the (ADJUST) key twice in LOCAL.**

```
DROP.POScorrect
                [ENT]
```

3 **Press the (ENTER) key.**

```
DROP.POScorrect
:Y600dpi
```

4 **Press (▲)(▼) to select the resolution.**

- Setting value: Y600dpi / Y900dpi / Y1200dpi
- Perform correction for all resolutions.

```
DROP.POScorrect
:Y600dpi
```

5 **Press the (ENTER) key.**

```
DROP.POScorrect
PRINT           [ENT]
```

6 **Press the (ENTER) key to start pattern printing.**

- Test pattern is printed. (The printed patterns are called Pattern 1, Pattern 2, Pattern 3... in the order of printing.)

```
 ** PRINTING **
  PLEASE WAIT
```

7 **Press (▲)(▼) to correct the dot position of Pattern 1~.**

```
PATTERN1
=               0.0
```

- Corrected feeding rate: -40.0 to 40.0
- Check the test patterns. The position where an outward feeding line and a return feeding line become one straight line is the correction value.
- When the correction value in not between -40.0 and 40.0, adjust the height of the printing heads and then perform the operations in Step 2 and later.

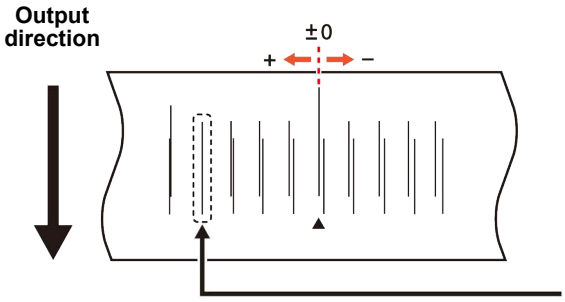

The dots at the fourth position counted from the zero position in the positive direction form a straight line. In this case, the dot position correction value is 4.0.

8 **Press the ENTER key.**

- Displays the next pattern input.
- Repeat step7.

9 **Press the END key several times to end the setting.**

Performing to correct the dot position without ADJUST key

You can select “DROP.POScorrect” by using the FUNCTION key in the Local without pressing the ADJUST key.

Press the FUNCTION key in Local. → **Press ▲ ▼ to select [SETUP], and press the ENTER key.** → **Press ▲ ▼ to select [DROP.POScorrect], and press the ENTER key twice.**

- It becomes the same condition as the key is pressed from Local.

Setting Logical Seek

The motion of Head varies depending on the set of Logical-seek.

Important!

- You cannot specify the logical seek at the RasterLink side. When you set this machine to “Host”, printing will be performed in “LOGICAL SEEK=ON” status.

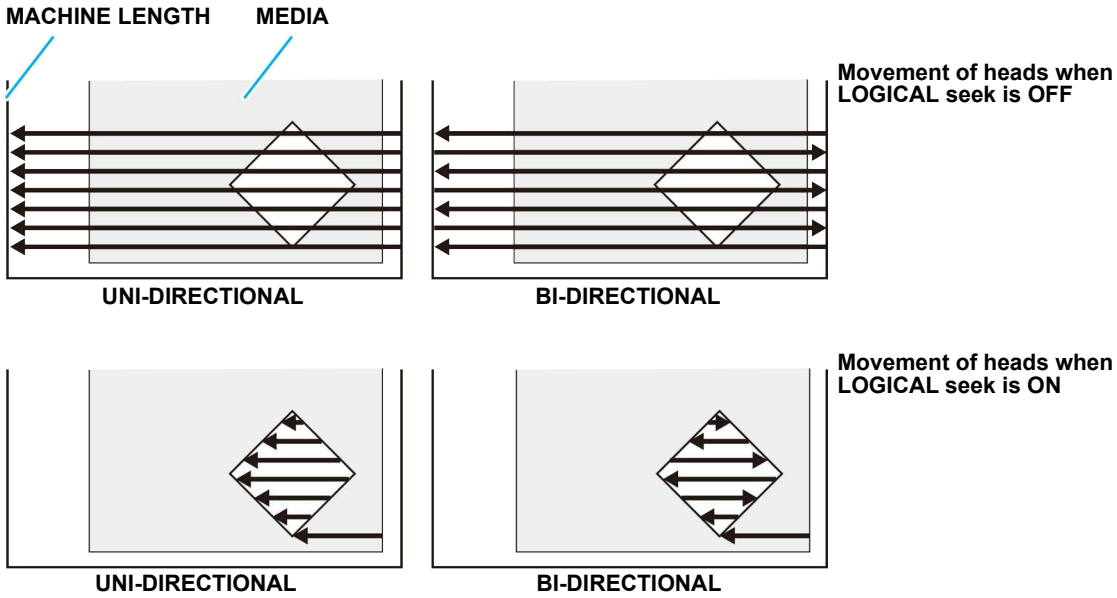

1 **Press the (FUNCTION) key in LOCAL.**

```
FUNCTION
VIEW                [ENT]
```

2 **Press (▲)(▼) to select [SET UP].**

```
FUNCTION
SETUP               [ENT]
```

3 **Press the (ENTER) key.**

```
SETUP
FEED COMP.          [ENT]
```

4 **Press (▲)(▼) to select [LOGICAL SEEK].**

```
SETUP
LOGICAL SEEK        [ENT]
```

5 **Press the (ENTER) key.**

```
LOGICAL SEEK
:HOST
```

6 **Press (▲)(▼) to select a set value.**

- **Set value** : HOST / ON / OFF

```
LOGICAL SEEK
:ON
```

7 **Press the (ENTER) key.**

```
SETUP
LOGICAL SEEK        [ENT]
```

8 **Press the (END) key several times to end the setting.**

Setting UV mode

Set the emission pattern and illumination intensity for the UVLED.

1 **Press the (FUNCTION) key in LOCAL.**

```
FUNCTION
VIEW                [ENT]
```

2 **Press (▲)(▼) to select [SET UP], and the press the (ENTER) key.**

```
SETUP
FEED COMP.          [ENT]
```

3 **Press (▲)(▼) to select [UV MODE].**

```
SETUP
UV MODE             [ENT]
```

4 **Press the (ENTER) key.**

```
UV MODE
:HOST
```

5 **Press (▲)(▼) to select a set value.**

```
UV MODE
:MANUAL
```

HOST : Applies UV with the emission pattern and illumination intensity set in the application.

MANUAL : Applies UV with the pattern and illumination intensity that you set.

6 **Press the (ENTER) key.**

- When you selected “HOST” in step5, go to step 7. When you selected “MANUAL”, go to step 8.

7 **Press (▲)(▼) to adjust the intensity (LIGHT), then press the (ENTER) key.**

```
UV MODE
LIGHT ADJUST :   0%
```

8 **Press (▲)(▼) to select the ink type to be set, then press the (ENTER) key.**

```
UV MODE
:Color
```

- **Set value** : Color/ White/ Clear Ink

9 **Press (▲)(▼) to select the scan direction, then press the (ENTER) key.**

```
UV MODE
:Bi
```

- **Set value** : Bi / Uni

10 **Press (▲)(▼) to select the pattern to be printed, then press the (ENTER) key.**

```
UV MODE
:PATTERN 1
```

- **Set value** : PATTERN 1, 2 ~ / NOPRINT
- If you select “NOPRINT”, no printing will be done when print data is sent - only UV lamp operation will be carried out.

11 **Press (▲)(▼) to select the emission level, then press the (ENTER) key.**

```
UV MODE
LEVEL :10
```

- **Set value** : LEVEL 0 to 15 (The higher this value is, the greater the intensity will be.)

12 **Press the (END) key several times to end the setting.**

Perform setting to reduce stripes between passes

What is the MAPS Function?

If performing media correction does not resolve feeding stripes, use the MAPS (Mimaki Advanced PassSystem) function to disperse the pass boundary to make the feeding stripes less visible.
With the JFX200, you can use both the MAPS1 function and the MAPS2 function.

- With MAPS1, the printing speed can be adjusted, but depending on the image to be printed, there may be color changes. With MAPS2, both feeding stripes and color changes can be reduced, but speed cannot be adjusted. Choose the function based on the image to be printed.
- MAPS1 effect differs depending on the set value of the printing speed. Use it after checking effect in advance.
- When you speed up the printing speed, it takes shorter time to print. However, MAPS1 effect becomes weak.
- When you slow down the printing speed, it takes longer time to print. However, MAPS1 effect becomes strong and feeding stripes become less visible.
- Enabling the MAPS function, slight color change may be found compared to when the MAPS function disable. Use it after checking effect in advance.
- MAPS may not be effective depending on image to be printed. Use it after checking effect in advance.

Setting MAPS1 Function

1 **Press the FUNCTION key in LOCAL.**

```
FUNCTION
SETUP                [ENT]
```

2 **Press the ENTER key.**

```
SETUP
FEED COMP.           [ENT]
```

3 **Press ▲ ▼ to select [MAPS].**

```
SETUP
MAPS                 [ENT]
```

4 **Press the ENTER key.**

```
MAPS
:OFF
```

5 **Press ▲ ▼ to select MAPS1.**

- Set Value：MAPS1, MAPS2, OFF

```
MAPS
:MAPS 1
```

6 **Press the ENTER key.**

- If you selected MAPS2 or OFF in step 5, proceed to step 8.

```
PRINT SPEED ADJUST
=                    0%
```

7 **Press ▲ ▼ to change print speed.**

- Set Value:-50 to +50%

```
PRINT SPEED ADJUST
=                   10%
```

Important!
- When you change the speed, nozzle recovery effect cannot work in some cases. Use it after checking.

8 **Press the (ENTER) key.**

```
SETUP
MAPS                [ENT]
```

9 **Press the (END) key several times to end the setting.**

Setting MAPS2 Function (4 color)

1 **Press the (FUNCTION) key in LOCAL.**

```
FUNCTION
SETUP               [ENT]
```

2 **Press the (ENTER) key.**

```
SETUP
FEED COMP.          [ENT]
```

3 **Press (▲)(▼) to select [MAPS].**

```
SETUP
MAPS                [ENT]
```

4 **Press the (ENTER) key.**

```
MAPS
:OFF
```

5 **Press (▲)(▼) to select MAPS2.**

- Set Value：MAPS1, MAPS2, OFF

```
MAPS
:MAPS 2
```

6 **Press the (ENTER) key.**

- If you selected OFF in step 5, proceed to step 12.

```
MAPS 2
:AUTO
```

7 **Press (▲)(▼) to select "AUTO" or "MANUAL".**

- **AUTO** : Set the print pattern and smoothing level to the recommended value automatically depending on printing mode.
- **MANUAL** : You can adjust the set value.

```
MAPS2
:AUTO
```

Important! • If feeding stripes and color change is not improved by "AUTO" setting, please adjust the print pattern and smoothing level by "MANUAL" setting.

8 **Press the (ENTER) key.**

- When selecting the "AUTO" in the Step 7, proceed to the step 12.
- When selecting the "MANUAL" in the Step 7, proceed to the step 9.

```
MAPS2
PATTERN:1
```

9 **Press ▲ ▼ to select pattern to print.**

```
MAPS2
PATTERN : 2
```

- AUTO : A pattern that matches the print mode will be set automatically.
- Pattern 1 to 5 : The pattern that you select will be printed.

Important!
- MAPS2 effect differs depending on image to be printed. Change the printing pattern and use it after checking effect in advance.

10 **Press the ENTER key.**

```
MAPS2
SMOOTHING LV. : AUTO
```

11 **Press ▲ ▼ to change the smoothing level.**

```
MAPS2
SMOOTHING LV. : 100%
```

- If using media where the ink tends to run, you may be able to improve image quality by lowering the smoothing level.

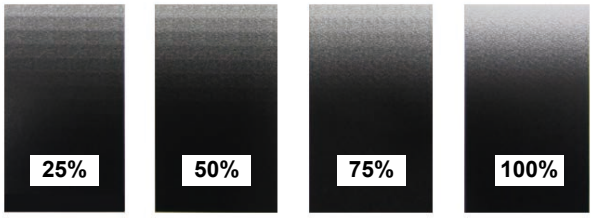

- **Set Value** : AUTO, 5 to 100% (set in units of 5%)
- **AUTO** : Set the smoothing level automatically depending on printing mode.
- **5 to 100%** : The MAPS2 effect become strong as the set value increase, and become weak as the set value decrease.

12 **Press the ENTER key.**

```
SETUP
MAPS                [ENT]
```

13 **Press the END key several times to end the setting.**

Setting MAPS2 Function (4 color + special color ink)

1 **Press the FUNCTION key in LOCAL.**

```
FUNCTION
SETUP               [ENT]
```

2 **Press the ENTER key.**

```
SETUP
FEED COMP.          [ENT]
```

3 **Press ▲ ▼ to select [MAPS].**

```
SETUP
MAPS                [ENT]
```

4 **Press the ENTER key.**

```
MAPS
:OFF
```

5 **Press ▲ ▼ to select "MAPS2" and press the ENTER key.**

```
MAPS2
:AUTO
```

- Set Value：MAPS1, MAPS2, OFF
- If you selected OFF, proceed to step 11.

6 **Press ▲ ▼ to select "AUTO" or "MANUAL".**

```
MAPS2
:MANUAL
```

- **AUTO** : Set the print pattern and smoothing level to the recommended value automatically depending on printing mode.
- **MANUAL** : You can adjust the set value.

Important!
- If feeding stripes and color change is not improved by "AUTO" setting, please adjust the print pattern and smoothing level by "MANUAL" setting.

7 **Press the ENTER key.**

```
        COLOR        >
PATTERN:1
```

- When selecting the "AUTO" in the Step 6, proceed to the step 11.
- When selecting the "MANUAL" in the Step 6, proceed to the step8.

8 **Make the settings for the inks.**

(1) Press ▲ ▼ to set the COLOR.

```
        COLOR        >
PATTERN:AUTO
```

- AUTO : A pattern that matches the print mode will be set automatically.
- Pattern 1 to 5 : The pattern that you select will be printed.

(2) Press the ENTER key.
- A screen for setting SMOOTHING.LV will appear.

```
        COLOR        >
SMOOTHING LV.  :AUTO
```

(3) Press ▲ ▼ to set the SMOOTHING LV..

```
        COLOR        >
SMOOTHING LV.  : 50%
```

- **AUTO** : A pattern that matches the smoothing level will be set automatically.
- **5 to 100%** : The MAPS2 effect become strong as the set value increase, and become weak as the set value decrease.

(4) Press the END key, and then press ▶ key.

```
<       SPOT         >
PATTERN:AUTO
```

- A screen for setting SPOT will appear.

(5) Press ▲ ▼ to set the SPOT.

```
<       SPOT         >
PATTERN:AUTO
```

- AUTO : A pattern that matches the print mode will be set automatically.
- Pattern 1 to 5 : The pattern that you select will be printed.

(6) Press the ENTER key.
- A screen for setting SMOOTHING.LV will appear.

```
<        SPOT        >
SMOOTHING LV.  :AUTO
```

(7) Press ▲ ▼ to set the SMOOTHING LV..

```
<        SPOT        >
SMOOTHING LV.  :  50%
```

- **AUTO** : A pattern that matches the smoothing level will be set automatically.
- **5 to 100%** : The MAPS2 effect become strong as the set value increase, and become weak as the set value decrease.

(8) Press the END key, and then press ▶ key.
- A screen for setting CLEAR will appear.

```
<        CLEAR
PATTERN:AUTO
```

(9) Press ▲ ▼ to set the CLEAR.

```
<        CLEAR
PATTERN:AUTO
```

- **AUTO** : A pattern that matches the print mode will be set automatically.
- **Pattern 1 to 5** : The pattern that you select will be printed.

(10) Press the ENTER key.
- A screen for setting TYPE and LV. will appear.

```
<        CLEAR
TYPE/  LV.:AUTO
```

(11) Press ▲ ▼ to set the TYPE and LV..

```
<        CLEAR
TYPE/  LV.:AUTO
```

- **TYPE1 10 to 100%** :
  Set a value that matches the print mode.
- **TYPE2 10 to 100%** :
  Set a value that matches the print mode.

Important!
- MAPS2 effect differs depending on image to be printed. Change the printing pattern and use it after checking effect in advance.

9 Press the ENTER key.

```
SETUP
MAPS                [ENT]
```

10 Press the END key several times to end the setting.

Setting Work Change

Set whether to return to the local mode or keep the remote mode after online drawing.

1 **Press the (FUNCTION) key in LOCAL.**

```
FUNCTION
VIEW                [ENT]
```

2 **Press (▲)(▼) to select [SET UP].**

```
FUNCTION
SETUP               [ENT]
```

3 **Press the (ENTER) key.**

```
SETUP
FEED COMP.          [ENT]
```

4 **Press (▲)(▼) to select [WORK CHANGE].**

```
SETUP
WORK CHANGE         [ENT]
```

5 **Press the (ENTER) key.**

```
WORK CHANGE
:OFF
```

6 **Press (▲)(▼) to select a set value.**

```
WORK CHANGE
:ON
```

OFF : Stays in remote status after online printing. (When the next printing data has been received, it will be overprinted.)

ON : After online drawing, the Y bar is retracted, and return to the local.

HOST : If you specify the "PRINT COUNT" to two or more in the RasterLink6 screen, Y bar is retracted for each print end and return to the local.

- Position Y bar is retracted will be the position that set in P.2-18 “Setting the view position”.

7 **Press the (ENTER) key.**

```
SETUP
WORK CHANGE         [ENT]
```

8 **Press the (END) key several times to end the setting.**

Setting Ionizer

Set the operation when the optional ionizer is installed.

Important!

- If you have not installed the optional ionizer, these settings will not appear. If you have installed the ionizer but these settings fail to appear, contact the distributor or a MIMAKI sales office or call center.

1 **Press the FUNCTION key in LOCAL.**

```
FUNCTION
VIEW                [ENT]
```

2 **Press ▲ ▼ to select [SET UP].**

```
FUNCTION
SETUP               [ENT]
```

3 **Press the ENTER key.**

```
SETUP
FEED COMP.          [ENT]
```

4 **Press ▲ ▼ to select [IONIZER].**

```
SETUP
IONIZER             [ENT]
```

5 **Press the ENTER key.**

```
IONIZER
:ON
```

6 **Press ▲ ▼ to select a set value.**

```
IONIZER
:OFF
```

ON : For normal printing, turn on ionizer before and during printing to remove electricity. For reverse printing, remove electricity before printing. Turn on ionizer while shifting to [View].

OFF : Static electricity is not removed.

7 **Press the ENTER key.**

```
SETUP
IONIZER             [ENT]
```

8 **Press the END key several times to end the setting.**

Setting Auto Cleaning

You can set the machine so that it counts the number of printed files or the length after printing has been completed, and performs cleaning automatically if required.
The machine can perform a stable printing operation with its heads always kept clean.

1 **Press the (FUNCTION) key in LOCAL.**

```
FUNCTION
VIEW              [ENT]
```

2 **Press (▲)(▼) to select [SET UP].**

```
FUNCTION
SETUP             [ENT]
```

3 **Press the (ENTER) key.**

```
SETUP
FEED COMP.        [ENT]
```

4 **Press (▲)(▼) to select [AUTO CLEANING].**

```
SETUP
AUTO CLEANING     [ENT]
```

5 **Press the (ENTER) key.**

```
AUTO CLEANING
:OFF
```

6 **Press (▲)(▼) to select the type of auto cleaning.**

- When you select auto cleaning "PAGE", after set number of printings has been completed, head cleaning will be performed automatically.
- If you do not set auto cleaning, first select "OFF" and then proceed to the Step 11.

```
AUTO CLEANING
:PAGE
```

7 **Press the (ENTER) key.**

8 **Press (▲)(▼) to set the cleaning interval.**

- Setting value : 1 to 1000 page

```
INTERVAL
=                 10page
```

9 **Press the (ENTER) key.**

```
TYPE
:SOFT
```

10 **Press (▲)(▼) to set the cleaning type.**

Set Value : NORMAL/ SOFT/HARD

```
TYPE
:NORMAL
```

11 **Press the (ENTER) key.**

12 **Press the (END) key several times to end the setting.**

Important!

- Depending on the state of the heads, etc., the image quality deterioration may not be improved even with this function performed.In this case, contact our service office or the distributor in your region.

Setting nozzle face cleaning time

Cleaning of the head nozzle face is performed automatically before printing begins in order to remove any ink adhering to the nozzle face.

1 **Press the (FUNCTION) key in LOCAL.**

```
FUNCTION
VIEW                [ENT]
```

2 **Press (▲)(▼) to select [SET UP].**

```
FUNCTION
SETUP               [ENT]
```

3 **Press the (ENTER) key.**

```
SETUP
FEED COMP.          [ENT]
```

4 **Press (▲)(▼) to select [INTERVAL WIPING].**

```
SETUP
INTERVAL WIPING[ENT]
```

5 **Press the (ENTER) key.**

```
INTERVAL WIPING
:OFF
```

6 **Press (▲)(▼) to set intervals.**

```
INTERVAL WIPING
:PAGE
```

- When you select "PAGE" in [INTERVAL WIPING], once the set number of prints is complete, the head nozzle is cleaned automatically before the next print starts.
- When you select "TIME" in [INTERVAL WIPING], the head nozzle is cleaned automatically once the print time exceeds the set time.
- If you do not want to set [INTERVAL WIPING], select "OFF" and proceed to Step 9.

7 **Press the (ENTER) key.**

8 **Press the (END) key several times to end the setting.**

```
INTERVAL
=                   1page
```

Set value (Page): 1 to 100 pages
Set value (Time): 3 to 50 minutes

9 **Press the (ENTER) key.**

Other Settings

Change the settings according to the types of use.

1 **Press the (FUNCTION) key in LOCAL.**

```
FUNCTION
VIEW                [ENT]
```

2 **Press (▲)(▼) to select [SET UP].**

```
FUNCTION
SETUP               [ENT]
```

3 **Press the (ENTER) key.**

```
SETUP
FEED COMP.          [ENT]
```

4 **Press (▲)(▼) to select an item for setting.**

- Select it, referring to P.3-7 “List of Functions”.

5 **Press the (ENTER) key.**

6 **Press (▲)(▼) to select the setting value.**

- Select it, referring to P.3-7 “List of Functions”.

7 **Press the (ENTER) key.**

8 **Press the (END) key several times to end the setting.**

Important!

- The set value is retained even when the power is turned "OFF".

Machine Settings

Machine settings are functions for using this machine easily.
The following items can be set in Machine settings.

Item		Set value	Default	Meaning
AUTO Power-off (☞ P.3-22)		NONE/ 10 ~ 600min	30min	When no operation has been performed for the set time, the power supply is automatically turned “OFF”.
TIME SET (☞ P.3-23)		+4h ~ -20h	Japan time	Time difference is corrected.
UNIT (☞ P.3-24)	TEMP.	°C (Centigrade) /°F (Fahrenheit)	°C	A unit for displaying temperature is set.
	LENGTH	mm / inch	mm	A unit for displaying length and area is set.
KEY BUZZER (☞ P.3-25)		OFF / ON	ON	A buzzer sound when keys are pressed is set.
LANGUAGE (☞ P.3-26)		English ニホンゴ Deutsch Français Español Italiano Português	English	Displayed language is changed.
RESET(☞ P.3-27)		————	————	All setting values are returned to the status default.

Setting a AUTO Power-off

When no operation has been performed for the set time, the power supply is automatically turned “OFF”.

1 **Press the (FUNCTION) key in LOCAL.**

```
FUNCTION
VIEW                [ENT]
```

2 **Press (▲)(▼) to select [MACHINE SETUP].**

```
FUNCTION
MACHINE SETUP       [ENT]
```

3 **Press the (ENTER) key twice.**

```
AUTO Power-off
=                   30min
```

4 **Press (▲)(▼) to set time to turn OFF the power supply.**

- Set Value : none, 10 to 600min

```
AUTO Power-off
=                   60min
```

5 **Press the (ENTER) key.**

```
MACHINE SETUP
AUTO Power-off      [ENT]
```

6 **Press the (END) key several times to end the setting.**

Important!

- If it has received data from the PC in the auto-power-off status, the power supply is turned on, however, the printing operation does not start automatically.

Setting Time

You can set time of your country (time difference).

1 **Press the (FUNCTION) key in LOCAL.**

```
FUNCTION
VIEW              [ENT]
```

2 **Press (▲)(▼) to select [MACHINE SETUP].**

```
FUNCTION
MACHINE SETUP     [ENT]
```

3 **Press the (ENTER) key.**

```
MACHINE SETUP
AUTO Power-off    [ENT]
```

4 **Press (▲)(▼) to select [TIME SET].**

```
MACHINE SETUP
TIME SET          [ENT]
```

5 **Press the (ENTER) key.**

```
TIME SET
2012.10.05   21:30:00
```

6 **Press (▲)(▼)(◀)(▶) to enter time.**

Year/Month/Day/Time selecting : by the (◀)(▶) keys.
Year/Month/Day/Time inputting : by the (▲)(▼) keys.

7 **Press the (ENTER) key.**

- The entered date is displayed.

```
TIME SET
2012.10.05   15:30:00
```

8 **Press the (END) key several times to end the setting.**

- -20 hours to +4 hours can be set.

Setting Units

Units used by this machine are set.

1 **Press the (FUNCTION) key in LOCAL.**

```
FUNCTION
VIEW              [ENT]
```

2 **Press (▲)(▼) to select [MACHINE SETUP].**

```
FUNCTION
MACHINE SETUP     [ENT]
```

3 **Press the (ENTER) key.**

```
MACHINE SETUP
AUTO Power-off    [ENT]
```

4 **Press (▲)(▼) to select [UNIT].**

```
MACHINE SETUP
UNIT              [ENT]
```

5 **Press the (ENTER) key.**

```
TEMP.
:°C
```

6 **Press (▲)(▼) to select a unit of the temperature.**

- **Set value** : °C / °F

7 **Press the (ENTER) key.**

```
LENGTH
:mm
```

8 **Press (▲)(▼) to select a unit of the length.**

- **Set value** : mm / inch

9 **Press the (ENTER) key.**

```
MACHINE SETUP
UNIT              [ENT]
```

10 **Press the (END) key several times to end the setting.**

Setting a KEY BUZZER

You can turn off the buzzer sound when pressing the key.

1 **Press the (FUNCTION) key in LOCAL.**

```
FUNCTION
VIEW              [ENT]
```

2 **Press (▲)(▼) to select [MACHINE SETUP].**

```
FUNCTION
MACHINE SETUP     [ENT]
```

3 **Press the (ENTER) key.**

```
MACHINE SETUP
AUTO Power-off    [ENT]
```

4 **Press (▲)(▼) to select [KEY BUZZER].**

```
MACHINE SETUP
KEY BUZZER        [ENT]
```

5 **Press the (ENTER) key.**

```
KEY BUZZER
:ON
```

6 **Press (▲)(▼) to select ON/OFF.**

```
KEY BUZZER
:OFF
```

7 **Press the (ENTER) key.**

```
MACHINE SETUP
KEY BUZZER        [ENT]
```

8 **Press the (END) key several times to end the setting.**

- When the key buzzer is set to "OFF", the buzzer sound for errors, warnings, operation completion, etc. cannot be shut off.

Setting a LANGUAGE

You can change the displayed language.

1 **Press the (FUNCTION) key in LOCAL.**

```
FUNCTION
VIEW              [ENT]
```

2 **Press (▲)(▼) to select [MACHINE SETUP].**

```
FUNCTION
MACHINE SETUP     [ENT]
```

3 **Press the (ENTER) key.**

```
MACHINE SETUP
AUTO Power-off    [ENT]
```

4 **Press (▲)(▼) to select [LANGUAGE].**

```
MACHINE SETUP
LANGUAGE          [ENT]
```

5 **Press the (ENTER) key.**

```
LANGUAGE
:English
```

6 **Press (▲)(▼) to select language.**

- **Set Value**：ニホンゴ / English / Deutsch / Français / Español / Italiano / Português

```
MEDIA SIDUAL
:ﾆﾎﾝｺﾞ
```

7 **Press the (ENTER) key.**

```
MACHINE SETUP
LANGUAGE          [ENT]
```

8 **Press the (END) key several times to end the setting.**

Initializing the Settings

You can return the setting of “SETUP”, “MAINTENANCE” and “MACHINE SETUP” to the status before shipment.

1 **Press the (FUNCTION) key in LOCAL.**

```
FUNCTION
VIEW              [ENT]
```

2 **Press (▲)(▼) to select [MACHINE SETUP].**

```
FUNCTION
MACHINE SETUP     [ENT]
```

3 **Press the (ENTER) key.**

```
MACHINE SETUP
AUTO Power-off    [ENT]
```

4 **Press (▲)(▼) to select [RESET].**

```
MACHINE SETUP
RESET             [ENT]
```

5 **Press the (ENTER) key.**

```
RSET ALL SETTING
OK?               [ENT]
```

6 **Press the (ENTER) key.**

- The already configured settings are initialized.

```
RESET
EXECUTE           [ENT]
```

7 **Press the (END) key several times to end the setting.**

Confirming Machine Information

The information of this machine can be confirmed.
The following items can be confirmed as machine information.

Item		Description
USAGE	WIPING	The information of this machine can be confirmed.
	PRINT LENGTH	
	PRINT AREA	
	USE TIME	
	WASTE INK TANK	
	UV LAMP	
VERSION		This displays the firmware version of the machine.

Check the using status of the machine

You can check machine information such as wiping information and length printed by this machine.

1 **Press the (FUNCTION) key in LOCAL.**

```
FUNCTION
VIEW                [ENT]
```

2 **Press (▲)(▼) to select [INFORMATION].**

```
FUNCTION
INFORMATION         [ENT]
```

3 **Press the (ENTER) key.**

```
INFORMATION
USAGE               [ENT]
```

4 **Press the (ENTER) key.**

```
WIPING
=                   0
```

- The wiping Information is displayed.
- Every time you press the (ENTER) key, machine information below are displayed in series.

WIPING

Displays wiping information.

```
WIPING
=                   0
```

PRINT LENGTH

Displays printed length up to now.

```
PRINT LENGTH
=                   0m
```

PRINT AREA

Displays printed area up to now.

```
PRINT AREA
=                   0m²
```

WASTE INK TANK

Displays how full the waste ink tank is

```
WASTE INK TANK
=                   0%
```

UV LAMP

Displays the hours UV lamp 1 or 2 has been used.

```
UV LAMP1 :LED A
=                   0h
```

Check the machine version information

1 **Press the (FUNCTION) key in LOCAL.**

```
FUNCTION
VIEW                [ENT]
```

2 **Press (▲)(▼) to select [INFORMATION].**

```
FUNCTION
INFORMATION         [ENT]
```

3 **Press the (ENTER) key.**

```
INFORMATION
USAGE               [ENT]
```

4 **Press (▲)(▼) to select [VERSION].**

```
INFORMATION
VERSION             [ENT]
```

5 **Press the (ENTER) key.**

```
JFX200-2513    V1.00
MRL-III        V1.90
```

- When [ERROR HISTORY] is selected, the error history Information is displayed.
- When [VERSION] is selected, the version Information is displayed.
- When [List] is selected, the setting contents of the machine are printed.
- When [Ink REPL. Report] is selected, ink history of this machine are printed.

About Displayed Information

This section describes how to read displayed information.

ERROR HISTORY*1

Displaying the occurrence date

```
[00000]
 2015/07/19  22:13:00
```

(◀)(▶)

Displaying the contents of error

```
ERROR  12a
HDC  SPEED
```

VERSION

Displaying the version information such as F/W or the like.

```
JFX200-2513    V1.00
MRL-III        V1.80
```

*1. Supported from the firmware ver.1.50

Displaying the Information of this machine

1 **Press the (ENTER) key in LOCAL.**

```
LUS-150        MMKKCCKK
REMAIN         99999999
```

2 **The information is displayed sequentially with the (ENTER) key .**

- The information shown on the below appear.

Remaining amount of ink

```
LUS-150        MMKKCCKK
REMAIN         99999999
```

Error (when ink error occurs)

```
NON INK IC
MMBBYYKK
```

Warning (when warning occurs)

```
WARNING
Replace a Wiper[MNT]
```

Serial No.

```
SERIAL No.
:********
```

Version

```
JFX200         V1.00
MRL-III        V1.90
```

Main PCB information

```
MAIN PCB       EPL*
```

＊：EPL or EPL2

RECOVERY NOZZLE

```
RECOVERY NOZZLE:*
CONFIRM DETAILS[MNT]
```

Press the (MAINT.) key and confim the description

3 **Press the (ENTER) key to return to LOCAL.**

To stop the circulation operation and stirring operation during power is OFF

When white ink installed, even if the power supply of the device is turned OFF, this machine starts in a regular basis and performs the circulation operation and stirring operation to prevent sedimentation of ink. (During operation display the remaining time on the display screen.)

During circulation operation

```
CIRCULATION
      0:09:40
```

When you want to discontinue the circulation or stirring operation and this machine to a usable state, please press the (END) key. (Correspondence with firmware version 1.50 or later)

During circulation operation

```
      AGITATION
      0:12:35
```

Press the (END) key to display the selection screen of continuity / interruption of operations.

To continue the circulation and stirring action:

Press (◀) (return to the display of operation)

To interrupt the circulation and stirring action:

Press (▶) (after the initial operation, display the local screen)

During circulation operation

```
CIRCULATION
CONTINUE <   > CANCEL
```

During circulation operation

```
      AGITATION
CONTINUE <   > CANCEL
```

Chapter 4
Maintenance

This chapter

describes the items required to use this machine more comfortably, which are the methods for the daily care, the maintenance of the ink unit etc.

Maintenance 4-3
Precautions for Maintenance 4-3
About Cleaning liquid 4-3
Maintenance of frame component 4-3
Cleaning the table 4-4
MBIS Maintenance 4-5
Cleaning the LM guide 4-5
Maintaining the Capping Station 4-6
Cleaning the Wiper and Cap 4-6
Cleaning the around station 4-9
Washing the Ink Discharge Passage (DISWAY WASH) 4-10
When the Machine Is Not Used for a Long Time (CUSTODY WASH) 4-11
Cleaning the Head and the Area around It . 4-14
Cleaning the Print Head Nozzle Surface 4-16
When Nozzle Clogging Cannot Be Solved . 4-18
Filling with ink from the sub tank to the head 4-18
Washing of Head nozzle 4-19
Washing of Head nozzle (When Using the PR-200 ink) 4-21
If nozzle missing due to color mixture of ink or aeration 4-24
Alternative nozzles for printing, when nozzles missing can not be improved 4-27
Automatic Maintenance Function 4-32
Setting the Refreshing Intervals 4-32
Setting the Cleaning Intervals 4-33
Replacing consumables 4-34
Replacing the wiper 4-34
If a Waste Ink Tank Confirmation Message Appears 4-35
Replacing the waste ink tank before the waste ink tank confirmation message is displayed (1) 4-38
Replacing the waste ink tank before the waste ink tank confirmation message is displayed (2) 4-39
Ink bottle cap replacement 4-39
Refilling antifreeze mixed water 4-40
Refill cooling water 4-41
Exchange the flushing filter 4-43
If a Flushing Filter Exchange Message Appears 4-43
Replacing the flushing filter before the replacement message is displayed 4-44

Maintenance

Maintain the machine regularly or as necessary so that its accuracy will be maintained and it can continue to be used for a long time.

Precautions for Maintenance

Pay attention to the following items when maintaining this machine.

- When using cleaning solution for maintenance, be sure to wear the supplied protective glasses.

- Never disassemble the machine.Disassembling it can result in electric shock hazards or damage to the machine.
  Before maintenance, be sure to turn off the power button, and unplug the power cable; otherwise, an unexpected accident may occur.

- Prevent moisture from entering the machine. Moisture inside the machine can cause electric shock hazards or damage to the machine.

- To ensure stable ink jetting, it is necessary for the machine to eject a small amount of ink (flushing) regularly when a printing (outputting) operation has not been performed for a long time.
- In case you do not use this machine for a long time, be sure unplug the power cable and remove the set media.
- Make maintenance after the LED UV has been sufficiently cooled, or burn injury may occur.

- Do not use benzene, thinner, or any chemical agent containing an abrasive.Such materials can deteriorate or deform the surface of the cover.
- Do not apply a lubricant, etc. to any parts inside the machine. Doing so can cause printing failure.
- Be careful that the cleaning solution, ink, etc. not to stick to the cover because this may cause the surface of the cover to deteriorate or deform.

About Cleaning liquid

Use the cleaning liquid dedicated for the ink being used.

Type of Ink	Applicable maintenance washings
UV ink	Cleaning liquid for maintenance (SPC-0568) Maintenance cleaning liquid kit (SPC-0569)

Maintenance of frame component

When the exterior surfaces of the machine are stained, dampen a soft cloth with water or a neutral detergent diluted with water, squeeze it, and wipe the surfaces with the cloth. Clean dust on the table.

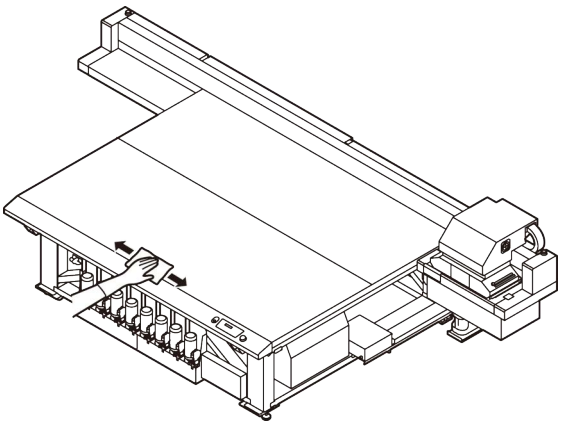

Cleaning the table

- Turn off the main power supply and unplug the power cable before carrying out maintenance.

Continuing to use the dirty table will cause dried ink and attached dust to rub against the head nozzle surface, leading to ejection failures (e.g., nozzle clogging, deflection).

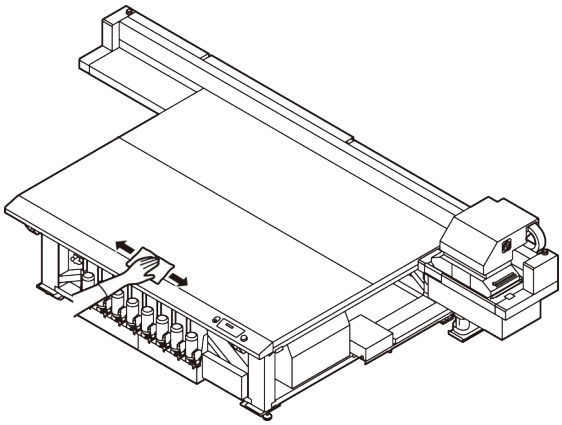

- Do not use organic solvents such as acetone and IPA to clean the table. These may damage the table. If the table becomes damaged, it cannot be repaired on-site.

- Be careful to prevent liquids from getting inside the machine. Otherwise there is a risk of failure, electric shock, or fire.

- Remove dust or any solid materials frequently, using soft brush, dry cloth, or paper towel.
- For heavy soiling, wipe using a soft cloth soaked in diluted neutral detergent and thoroughly wrung out.
- Be sure to clean the slot on the frame of the table or the screw holes since dust and dirt are easily accumulated in these parts.
- It is possible to remove ink that has hardened on the board surface using a spatula or similar tool, but be very careful not to scratch the board surface.

MBIS Maintenance

There is a cotton pad attached to the cap wiper section on the rear of the tank that is used to wipe off any ink adhering to the underside of the cap when replacing ink bottles of the MBIS. Periodically replace the cotton pad. (Recommended replacement period: Once every two weeks or once every fifth time bottles are replaced.)

1 **Loosen the screw.**

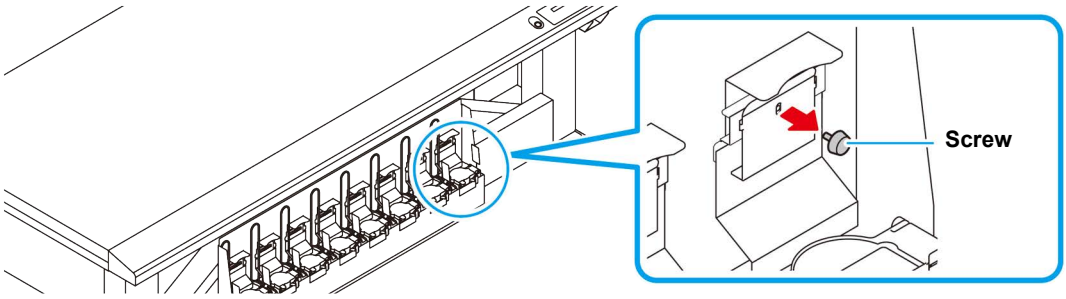

2 **While pressing A part, lift up B part as shown in the figure on the right.**

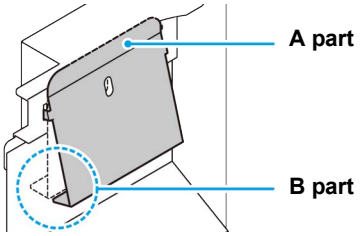

3 **Replace the Cotton pad.**

- Insert the cotton pad until the section indicated by the dotted line in the figure below.

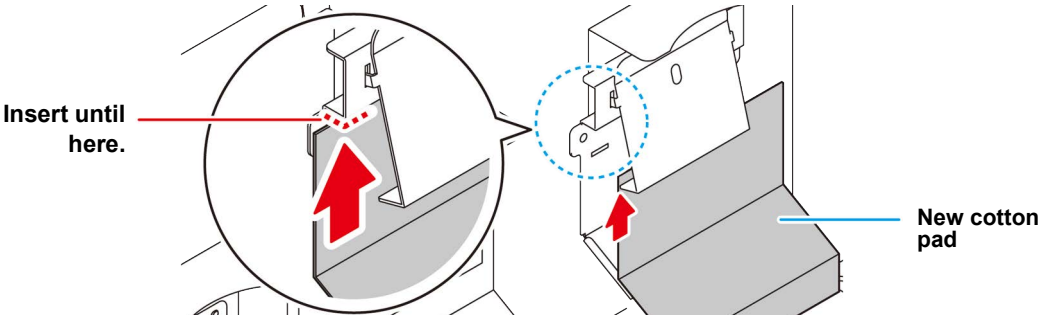

4 **Fixing the screw.**

Cleaning the LM guide

When the LM guide gets dirty, wipe the LM guide with soft cloth.

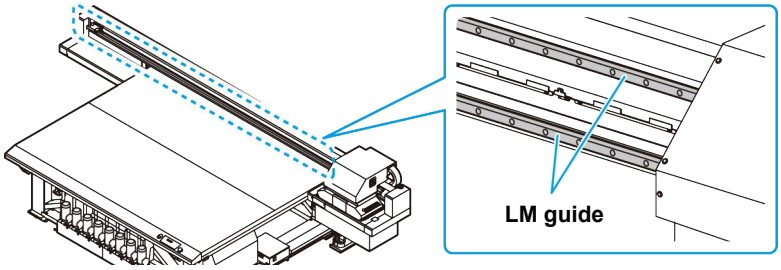

Maintaining the Capping Station

Maintain the ink cap, wiper, etc. located in the capping station. (SATION MAINT.)

The ink cap and wiper function as follows.

- **Wiper** : It wipes off ink sticking to the head nozzles.
- **Ink cap** : It prevents the head nozzles from clogging due to dryness.

As the machine is used repeatedly, the wiper and ink cap gradually become dirty with ink, dust, etc.
If nozzle missing cannot be corrected even after head cleaning (☞ P.2-15) has been performed, use a Cleaning liquid 03 maintenance kit and clean stick.

Tools required for Maintenance	• Cleaning liquid for maintenance (SPC-0568)		
	• Clean stick (SPC-0527)	• Gloves	• Safety glasses

Caution

- Be sure to wear the supplied safety glasses and gloves when maintaining the capping station.Otherwise, you may get ink in your eyes.
- Do not move the carriage out of the capping station by hand.When it is desirable to move the carriage, press the MAINT. key to execute the carriage-out. (☞ P.4-5Steps 1 to 2)
- Be sure to perform maintenance for the ink cap and the wiper of capping station every day.
  If you leave it dirty, dirt may adhere to the nozzle surface, or, dust and dry ink may be rubbed against the nozzle. It may cause discharge defect.

Cleaning the Wiper and Cap

It is recommended that the wiper and cap be cleaned frequently in order to maintain the high image quality of the machine and keep the machine itself in good working order.

Important!

- Clean the wiper and the area around it about twice a week (it varies, depending on frequency in the use of the machine).
- Replace the wiper with a new one when it is extremely dirty or bent.(☞ P.4-33)
- When cleaning the wiper, be careful that lint from the clean stick does not get left on the wiper.Remaining lint may cause image quality to deteriorate.

1 **Press the MAINT. key in LOCAL.**

```
CARRIAGE OUT
                [ENT]
```

2 **Press the ENTER key.**

```
MOVE POSITION
:STATION MAINT.
```

3 **Press ▲ ▼ to select [STATION MAINT.].**

```
MOVE POSITION
:STATION MAINT.
```

4 **Press the ENTER key.**

- The carriage moves onto the table.

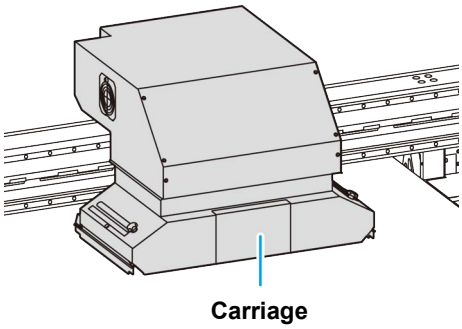

5 Remove the wiper.

- Pull out the wiper by holding the protrusions at its both ends.

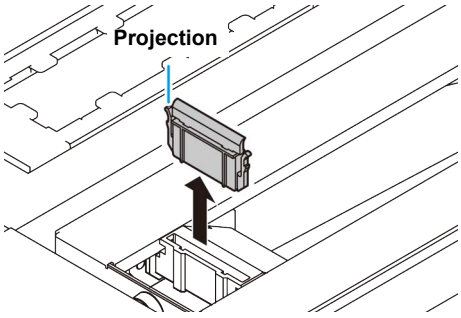

6 Clean the wiper and bracket.

- Wipe off the ink sticking to the wiper and bracket with a clean stick dipped in cleaning liquid for maintenance.
  Wipe off so that cleaning solution for maintenance will not remain.

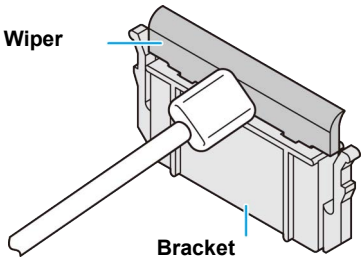

Important!

- Clean the wiper and bracket until it looks as shown in the photo on the right.
- After cleaning, make sure that the bracket and wiper are aligned horizontally.

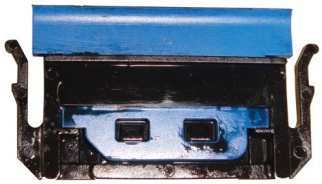

7 Set the wiper at the original position.

- Insert the wiper by holding both ends of the wiper.

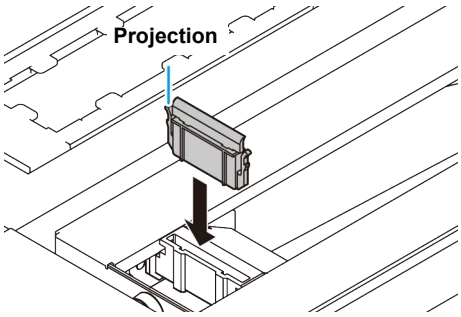

8 Clean the wiper blade.

- Soak the clean stick in the maintenance cleaning liquid, and then remove the ink that has adhered to the wiper blade.

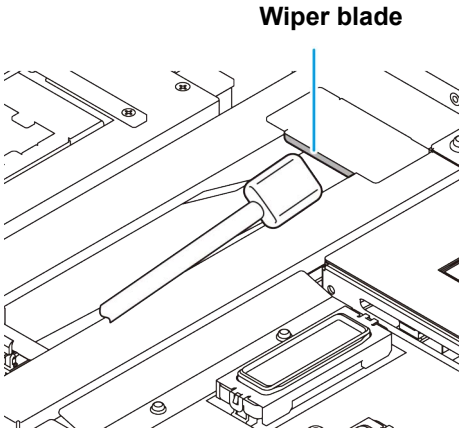

Important!

- Make sure to be careful with the edge of the wiper blade, and thoroughly clean the side (back side) where the wiper touches.
- Clean the wiper blade until it looks as shown in the photo below.

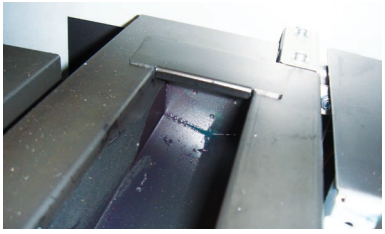

9 **Clean the cap rubber and cap rubber cover.**

- Wipe off the ink sticking to the cap rubber and cap rubber cover with a clean stick dipped in cleaning liquid for maintenance.
  Wipe off so that cleaning solution for maintenance will not remain.

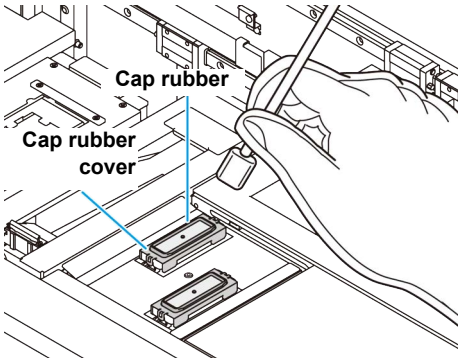

Important!

- Clean the cap rubber and cap rubber cover until they look like the picture.
- Make sure that the cap rubber and mesh inside the cap have not come off after cleaning.

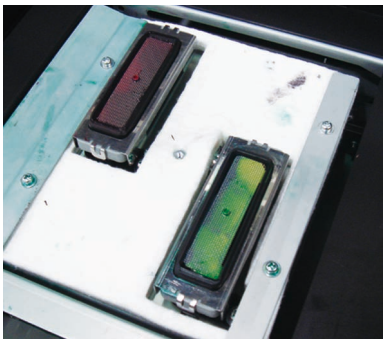

10 **Press the ENTER key after the cleaning.**

- After its initial operation, the machine returns to step1.

Performing the station maintenance without MAINT. key

You can select station maintenance by using the FUNCTION key in the Local without pressing the MAINT. key.

Press the FUNCTION key in Local. → **Press ▲ ▼ to select [MAINTENANCE].** → **Press the ENTER key twice.**
- It becomes the same condition as the MAINT. key is pressed from Local.

Cleaning the around station

It is recommended that the wiper and cap be cleaned frequently in order to maintain the high image quality of the machine and keep the machine itself in good working order.

Important!

- Clean the station and the area around it about twice a week (it varies, depending on frequency in the use of the machine).
- If ink remaining in the waste ink tray gets cured due to UV light, ink discharged at flushing cannot be moved into the waste ink bottle. It is recommended to clean the waste ink tray frequently.

1 **Press the MAINT. key in LOCAL.**

```
CARRIAGE OUT
                [ENT]
```

2 **Press the ENTER key.**

```
MOVE POSITION
:STATION MAINT.
```

3 **Press ▲ ▼ to select [STATION MAINT.], and then press the ENTER key.**

- The carriage moves onto the table.
- Cleaning the waste ink tray.

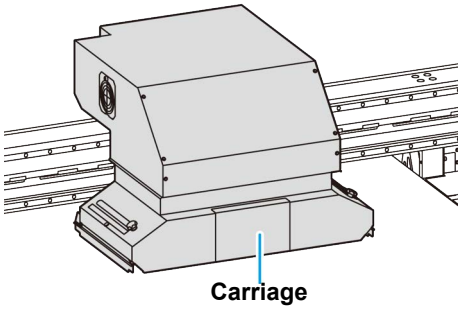

4 **Using a waste cloth etc., wipe off ink adhering to the waste ink tray.**

- Clean the grey-colored area in the figure on the right.
- When you cannot wipe off ink because it is firmly fixed, scrape it with a spatula etc.

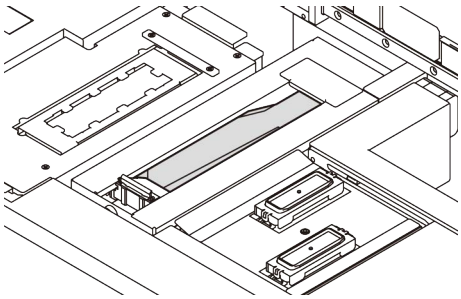

5 **Wipe off ink adhering to the flushing unit and/or shutter portions.**

- Soak the clean stick in the maintenance cleaning liquid, and then remove the ink that has adhered . Wipe off so that cleaning solution for maintenance will not remain.

Important!

- If the surface of the flushing filter is fluffy, use a clean stick soaked in the maintenance cleaning liquid to wipe it clean.
- If it is particularly dirty or the ink has hardened, replace the flushing filter.(☞ P.4-42)

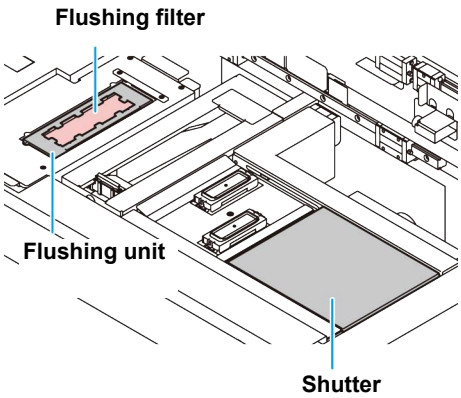

6 **Press the ENTER key after the cleaning.**

- After its initial operation, the machine returns to step1.

Washing the Ink Discharge Passage (DISWAY WASH)

Wash the ink discharge passage regularly to prevent the head nozzles from clogging due to ink coagulation inside the passage.

1 **Press the (MAINT.) key in LOCAL.**

```
CARRIAGE OUT
                [ENT]
```

2 **Press (▲)(▼) to select [DISWAY WASH].**

```
DISWAY WASH
                [ENT]
```

3 **Press the (ENTER) key.**

- The carriage moves onto the platen.
- Dry suction operation is performed repeatedly until the washing work is completed.

```
DISWAY WASH
COMPLETED(NEXT)[ENT]
```

4 **Fill up the cap with cleaning solution for maintenance, using a dropper.**

- Fill the cap with the cleaning solution just before the solution overflows from the cap.

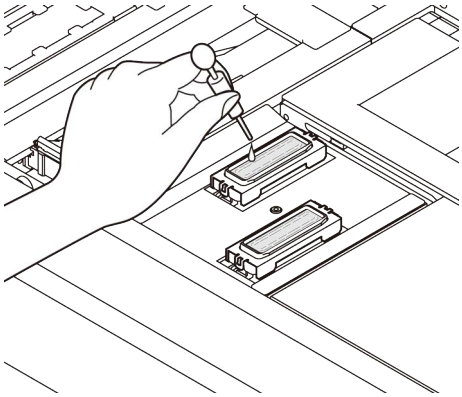

5 **Press the (ENTER) key.**

- After the idle absorbing operation has been performed for 30 seconds, the screen returns to step2.

```
DISWAY WASH
PLEASE WAIT
```

When the Machine Is Not Used for a Long Time (CUSTODY WASH)

When the machine is not going to be used for a week or more, use the cleaning function for custody to clean the head nozzles and ink discharge passage.After this, keep the machine in custody.

Check the items on the right beforehand.	**Is [INK END] displayed?** • The ink is absorbed when the nozzles are washed. At this time, if the state of "INK END" is detected, the nozzle washing operation cannot start. • Replace the ink bottle with another from which the state of "INK END" is not detected.

1 **Press the (MAINT.) key in LOCAL.**

```
CARRIAGE OUT
                [ENT]
```

2 **Press (▲)(▼) to select [CUSTODY WASH].**

```
CUSTODY WASH
                [ENT]
```

3 **Press the (ENTER) key.**

• The carriage moves onto the platen.

```
WIPER CLEANING
COMPLETED(NEXT) [ENT]
```

Important!

• Until wiper/ bracket cleaning is competed, [COMPLETED (NEXT): ENT] is displayed on the screen. After the work up to the step 4 is completed, press the (ENTER) key. If you press the (ENTER) key before cleaning is completed, the machine moves to the next washing procedure.

4 **Clean the wiper and the bracket.**

(1) Pull out it by holding projections at both ends of the wiper.
(2) Clean the wiper and bracket with a clean stick dipped in cleaning solution for maintenance . Wipe off so that cleaning solution for maintenance will not remain.
(3) Insert it in the original position by holding the projections at both ends of the wiper.

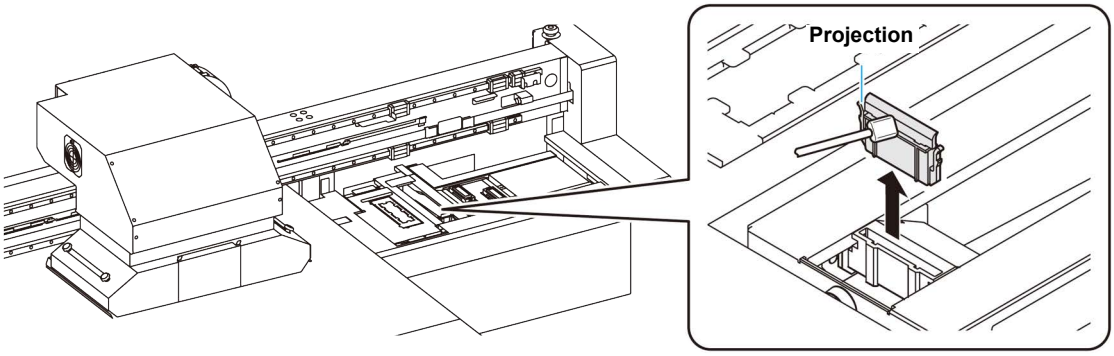

5 **Press the ENTER key.**

- The carriage moves onto the platen.

```
CAP CLEANING
COMPLETED(NEXT)[ENT]
```

Important!

- Until wiper cleaning is competed, [COMPLETED (NEXT): ENT] is displayed on the screen. After the work up to the step 6 is completed, press the ENTER key. If you press the ENTER key before cleaning is completed, the machine moves to the next washing procedure.

6 **Clean the cap rubber and cap rubber cover.**

- Wipe off the ink sticking to the cap rubber and cap rubber cover with a clean stick dipped in cleaning solution for maintenance. Wipe off so that cleaning solution for maintenance will not remain.
- At this time, the discharge passage is cleaned automatically.

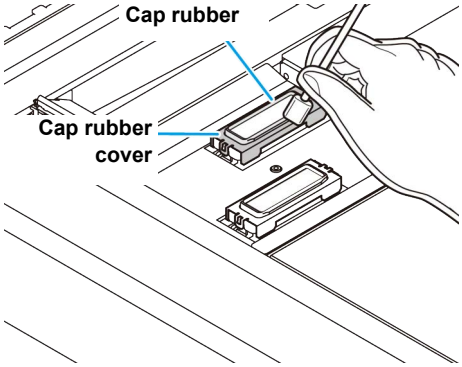

7 **Press the ENTER key.**

```
Fill the liquid.
COMPLETED(NEXT)[ENT]
```

Important!

- Until maintenance liquid is filled, [COMPLETED (NEXT): ENT] is displayed on the screen. After the work up to the Step 8 is completed, press the ENTER key. If you press the ENTER key before maintenance liquid is filled, the carriage returns to the original position.

8 **Fill up the cap with cleaning solution for maintenance, using a dropper.**

- Fill the cap with the cleaning solution just before the solution overflows from the cap.

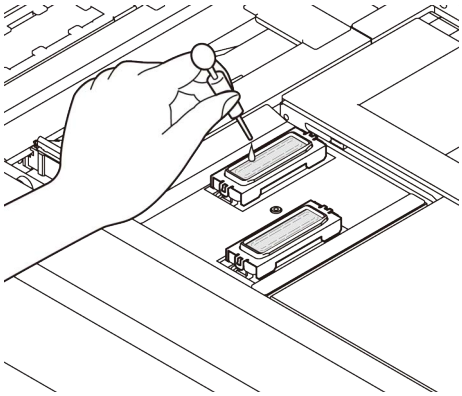

9 **Press ▲ ▼ to enter the leaving time. (Supported from firmware version 2.9 onward)**

10 **Press the ENTER key.**

- The nozzles are washed.
- When the nozzles have been completely washed, the head moves.

```
PLEASE WAIT
  00:00
```

↓

```
** CLEAMING **
PLEASE WAIT
```

11 Fill up the cap with cleaning solution for maintenance, using a dropper.

- Fill the cap with the cleaning solution just before the solution overflows from the cap.

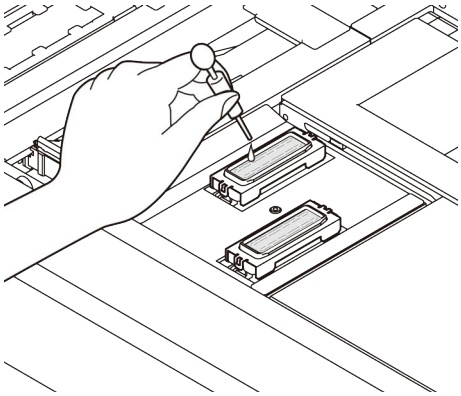

12 Press the ENTER key.

- After its initial operation, the machine returns to step2.

```
CUSTODY WASH
PLEASE WAIT
```

Cleaning the Head and the Area around It

Because the head employs a very precise mechanism, due care needs to be taken when it is cleaned.
Using a clean stick, etc., rub off gelatinous ink or dust that may stick to the lower part of the slider and the area around the head.In doing so, never rub the nozzles of the head.

Tools required for cleaning	• Clean stick (SPC-0527)	• Gloves	• Safety glasses

Caution

- Be sure to wear the attached safety glasses and gloves when cleaning the area around the head.Otherwise, you may get ink in your eyes.
- If you get the ink on your skin or in your eyes, wash it away with plenty of water immediately.
- Clean the bottom of carriage every day so that it will not get dirt from inks or dusts. If you leave it dirty, dust and dry ink may be rubbed against the nozzle at wiping operation when performing head cleaning.
- When you clean the carriage bottom surface, fully be careful not to rub the nozzle surface.

1 **Remove the cover of left side of the Y-bar.**

- Remove the screws (for two positions) and remove the cover.

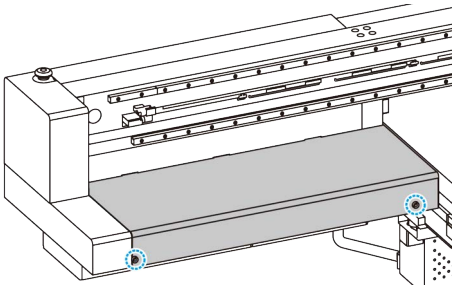

2 **Press the MAINT. key in LOCAL.**

```
CARRIAGE OUT
                [ENT]
```

3 **Press the ENTER key.**

```
MOVE POSITION
:STATION MAINT.
```

4 **Press ▲ ▼ to select [HEAD MAINT.].**

```
MOVE POSITION
:HEAD MAINT.
```

5 **Press the ENTER key.**

- Carriage will move to the left end of this device.

6 Wipe ink sticking to the side of the head off with a clean stick.

- Never rub the nozzles.

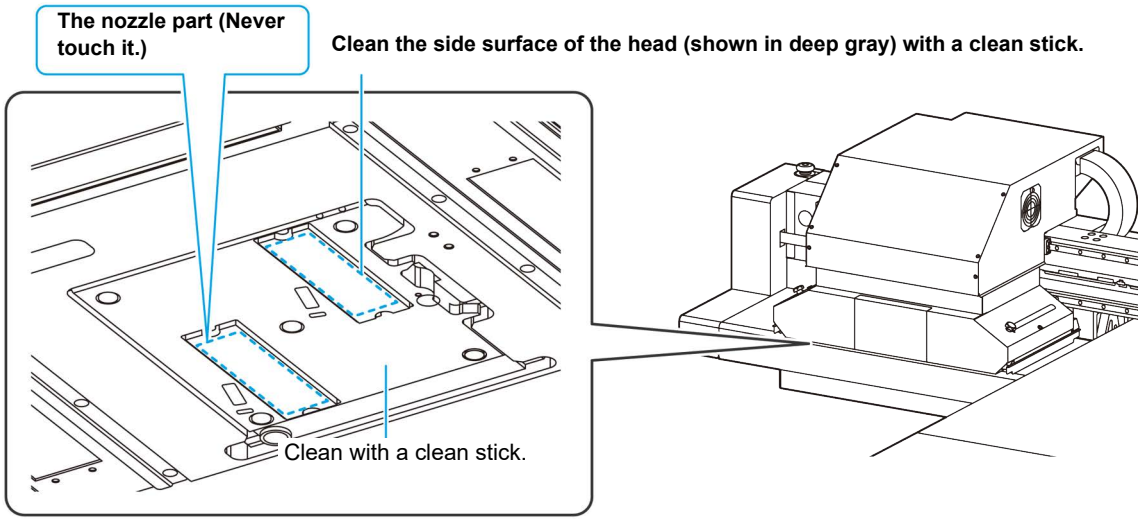

Important!

- Clean the side of the head and the carriage bottom until they look like the picture.
- If the nozzles have the streaks from the cap rubber, clean the nozzles as well.
- When you leave during maintenance (or cleaning), please make sure to complete the cleaning by pressing ENTER key. Without completing the cleaning, the nozzle part is left uncovered and then outside light makes the ink cure, which causes nozzle clogging or the like.

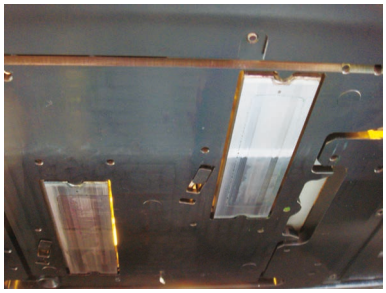

7 Press the ENTER key after the cleaning.

```
HEAD MAINTENANCE
COMPLETED          [ENT]
```

Cleaning the Print Head Nozzle Surface

Clean the print head nozzle surface with maintenance liquid 11 or 15 to prevent ejection failure or deflection.

- Do not use anything other than maintenance liquid 11 or 15 to clean the print head nozzle surface. This will increase the risk of machine failure or ejection failures.

Caution

- The print head uses an extremely delicate mechanism. Take great care when handling it.

Tools required for cleaning	• Clean stick (SPC-0527)	• Maintenance liquid 11 • Maintenance liquid 15

Caution

- Be sure to wear the attached safety glasses and gloves when cleaning the area around the head.Otherwise, you may get ink in your eyes.
- If you get the ink on your skin or in your eyes, wash it away with plenty of water immediately.

1 **Execute head cleaning[NORMAL].**

- Perform cleaning before maintenance so that no ink adheres to the nozzle surface.
- Refer to P.2-15

2 **Remove the cover of left side of the Y-bar.**

- Remove the screws (for two positions) and remove the cover.

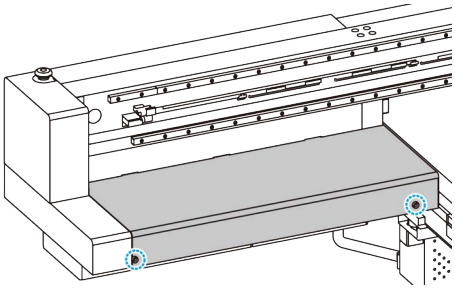

3 **Press the MAINT. key in LOCAL.**

```
CARRIAGE OUT
                [ENT]
```

4 **Press the ENTER key.**

```
MOVE POSITION
:STATION MAINT.
```

5 **Press ▲ ▼ to select [HEAD MAINT.].**

```
MOVE POSITION
:HEAD MAINT.
```

6 **Press the ENTER key.**

- Carriage will move to the left end of this device.

7 Use a clean stick soaked in the maintenance liquid.

8 Clean the print head nozzles surface.

- Clean the head nozzle surface toward the front from the rear of the head using a cleaning stick.

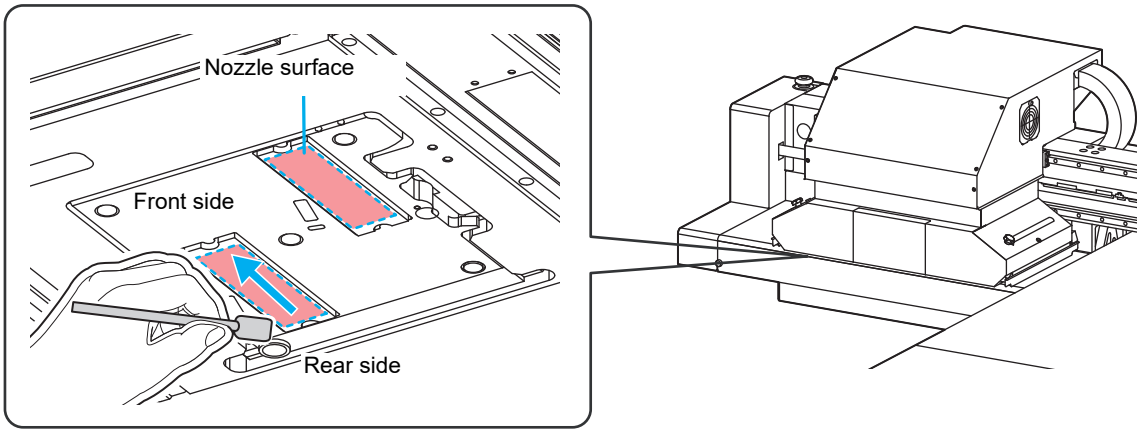

Caution

- Be sure to clean using a cleaning stick.
- Do not rub or press firmly on the sponge part with your fingers against the nozzle surface. This may damage the nozzle surface and result in ejection failure.
- Do not reuse cleaning sticks once used. This may cause nozzle clogging.

9 Press the ENTER key after the cleaning.

```
HEAD MAINTENANCE
COMPLETED        [ENT]
```

10 Execute head cleaning[NORMAL].

- Refer to P.2-15

When Nozzle Clogging Cannot Be Solved

When nozzle clogging cannot be solved even after the head cleaning (☞ P.2-15) has been done, perform the following two functions:

HEAD FILLUP	• Fill the head with ink. (☞ P.4-17)
NOZZLE WASH	• Wash the head nozzle. (☞ P.4-18)
NOZZLE RECOVERY	• Alternative nozzles for printing, when nozzles missing can not be improved. (☞ P.4-26)

Filling with ink from the sub tank to the head

1 **Select [HEAD FILLUP] of the maintenance menu.**

(1) Press the FUNCTION key in LOCAL.
(2) Press ▲ ▼ to select [MAINTENANCE] and press the ENTER key.
(3) Press ▲ ▼ to select [HEAD FILLUP].
(4) Press the ENTER key.

2 **Press ▲ ▼ ◀ ▶ to select the head to be filled.**

```
HEAD FILLUP
MMKKCCYY
```

▲ ▼

```
HEAD FILLUP
MMKK____
```

▲ ▼

```
HEAD FILLUP
____CCYY
```

- **Head selection**:by the ◀ ▶ keys.
- **Select to fill or not to fill**:by the ▲ ▼ keys.

3 **Press the ENTER key.**

```
** FILLING **
PLEASE WAIT
```

- Ink filling of the head starts.
- When ink filling is completed, the screen on the right is displayed.

```
HEAD FILLUP
END<          >RETRY
```

4 **Press ◀ to select "END".**

- If you want to perform filling again, press ▶ and perform procedures from Step 2.

5 **Press the END key several times to end the setting.**

Washing of Head nozzle

Perform cleaning of the nozzles in the heads to prevent them being clogged with coagulated ink.

Check the items on the right beforehand.	**Is [INK END] displayed?** • The ink is absorbed when the nozzles are washed. At this time, if the state of "INK END" is detected, the nozzle washing operation cannot start. • Replace the ink bottle with new one for which ink end has not been detected.

1 **Press the (MAINT.) key in LOCAL.**

```
CARRIAGE OUT
                [ENT]
```

2 **Press (▲)(▼) to select [NOZZLE WASH].**

```
NOZZLE WASH
                [ENT]
```

3 **Press the (ENTER) key.**

• The carriage moves.

```
WIPER CLEANING
COMPLETED(NEXT) [ENT]
```

Important! • Until wiper cleaning is competed, [COMPLETED (NEXT): ENT] is displayed on the screen. After the work up to the step 4 is completed, press the (ENTER) key. If you press the (ENTER) key before cleaning is completed, the machine moves to the next washing procedure.

4 **Clean the wiper and the bracket.**

(1) Open the right maintenance cover then pull out it by holding projections at both ends of the wiper.
(2) Clean the wiper and bracket with a clean stick dipped in cleaning solution for maintenance. (ML003-Z-K1) Wipe off so that cleaning solution for maintenance will not remain.
(3) Insert it in the original position by holding the projections at both ends of the wiper.

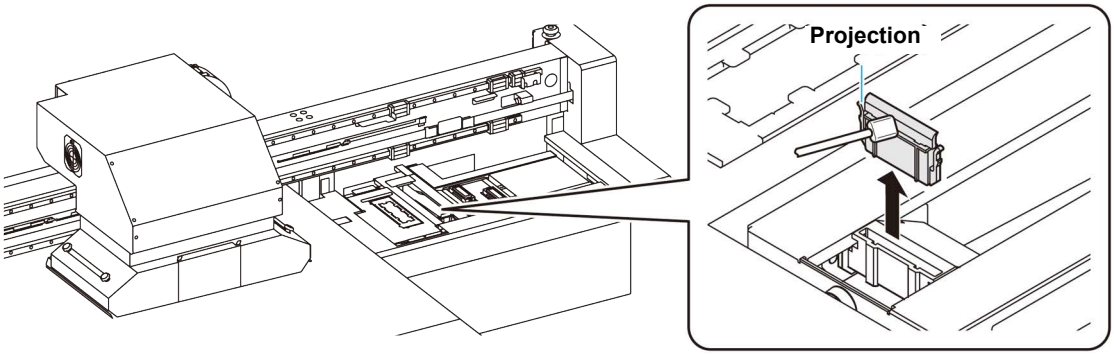

5 **Press the (ENTER) key.**

```
CAP CLEANING
COMPLETED(NEXT) [ENT]
```

Important! • Until wiper cleaning is competed, [COMPLETED (NEXT): ENT] is displayed on the screen. After the work up to the step 6 is completed, press the (ENTER) key. If you press the (ENTER) key before cleaning is completed, the machine moves to the next washing procedure.

6 Clean the cap rubber and cap rubber cover.

- Wipe off the ink sticking to the cap rubber and cap rubber cover with a clean stick dipped in cleaning solution for maintenance. Wipe off so that cleaning solution for maintenance will not remain.
- At this time, the discharge passage is cleaned automatically.

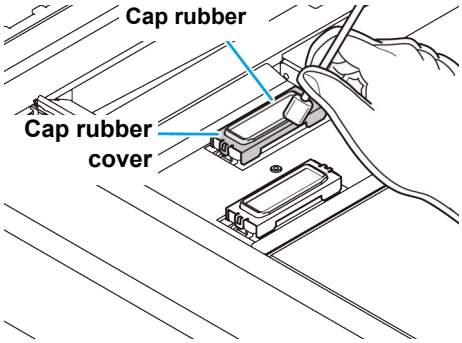

7 Press the ENTER key.

```
Fill the liquid.
COMPLETED(NEXT)[ENT]
```

Important!

- Until maintenance liquid is filled, [COMPLETED (NEXT): ENT] is displayed on the screen. After the work up to the Step 8 is completed, press the ENTER key. If you press the ENTER key before maintenance liquid is filled, the carriage returns to the original position.

8 Fill up the cap with cleaning solution for maintenance, using a dropper.

- Fill the cap with the cleaning solution just before the solution overflows from the cap.

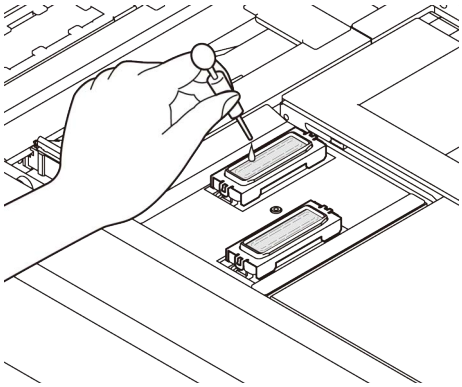

9 Press ▲ ▼ to enter the leaving time. (Supported from firmware version 2.9 onward)

- When using ML007 maintenance liquid: Recommended time is 1 minute.
- When using ML016 maintenance liquid: Recommended time is 10 minutes depending on nozzle condition.

10 Press the ENTER key.

- The cleaning solution filled in the cap is absorbed.
- The screen on the right is displayed while the cap is left in a cleaning solution
- It returns to the step2 after the duration.

```
PLEASE WAIT
  00:00
```

↓

```
** CLEAMING **
PLEASE WAIT
```

Important!

- When nozzle missing is not cleared even after this washing is carried out several times, contact the distributor in your region or our service office.

Washing of Head nozzle (When Using the PR-200 ink)

On models equipped with the PR-200, ink may clog the nozzle.
Please check the version on the label of the PR-200 ink cartridge, pack, or bottle, and clean the nozzle.
Please clean the nozzle twice a week for Ver.2 and once a month for Ver.3.

Maintenance liquid required	• F-200 / LF-200 maintenance liquid (SPC-0568)	• PR-200 cleaning solution (C-ML013-Z-B2-1-KW)

Label Ver. notation position

220ml Cartridge

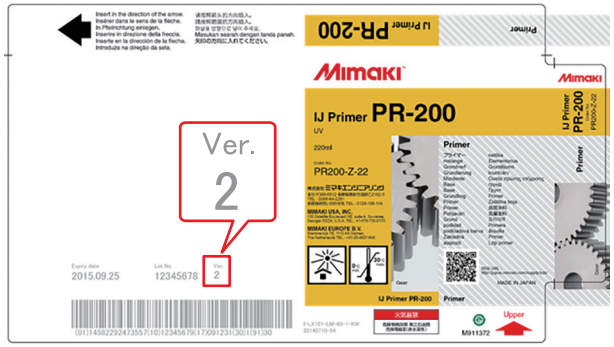

250ml Bottle

600ml Pack

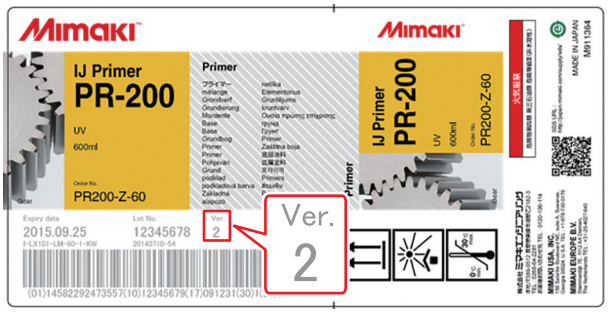

1L Bottle

1 **Press the (MAINT.) key in LOCAL.**

```
CARRIAGE OUT
                [ENT]
```

2 **Press (▲)(▼) to select [NOZZLE WASH].**

```
NOZZLE WASH
                [ENT]
```

3 **Press the (ENTER) key.**

• The carriage moves.

```
WIPER CLEANING
COMPLETED(NEXT) [ENT]
```

Important!

• Until wiper cleaning is competed, [COMPLETED (NEXT): ENT] is displayed on the screen. After the work up to the step 4 is completed, press the (ENTER) key. If you press the (ENTER) key before cleaning is completed, the machine moves to the next washing procedure.

4 Clean the wiper and the bracket.

(1) Open the right maintenance cover, hold the protrusions at both the ends of the wiper and pull it out.

(2) Use a clean stick soaked in the F-200/LF-200 maintenance liquid (SPC-0568).

- Wipe it off properly so that there is no residual F-200/LF-200 maintenance liquid.

(3) Hold the wiper by the protrusions at both the ends and push it back to the original position.

Important!

- When cleaning the wiper, bracket, cap rubber, and cap rubber cover, be sure to use the F-200/LF-200 maintenance liquid, and do not use the PR-200 Maintenance Liquid (C-ML013-Z-B2-1-KW).

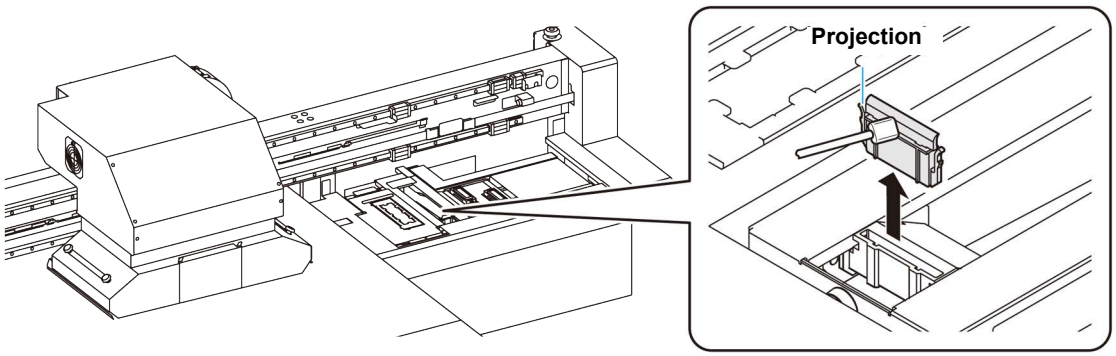

5 Press the ENTER key.

```
CAP CLEANING
COMPLETED(NEXT)[ENT]
```

Important!

- Until wiper cleaning is competed, [COMPLETED (NEXT): ENT] is displayed on the screen. After the work up to the step 6 is completed, press the ENTER key. If you press the ENTER key before cleaning is completed, the machine moves to the next washing procedure.

6 Clean the cap rubber and cap rubber cover.

- Wipe off any ink on the cap rubber and the cap rubber cover using a clean stick soaked in the F-200/LF-200 Maintenance Liquid. Wipe it off properly so that there is no residual F-200/LF-200 maintenance liquid.
- At this time, the discharge passage is cleaned automatically.

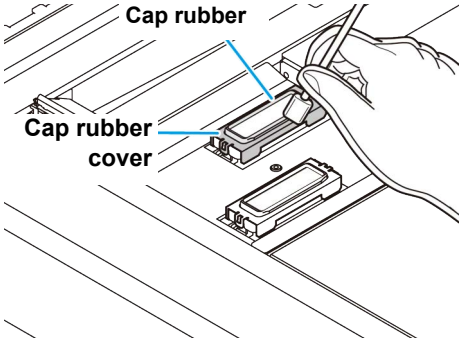

7 Press the ENTER key.

```
Fill the liquid.
COMPLETED(NEXT)[ENT]
```

Important!

- Until maintenance liquid is filled, [COMPLETED (NEXT): ENT] is displayed on the screen. After the work up to the Step 8 is completed, press the ENTER key. If you press the ENTER key before maintenance liquid is filled, the carriage returns to the original position.

8 Take the PR-200 Maintenance Liquid (C-ML013-Z-B2-1-KW) in a dropper and fill only the cap of the head equipped with PR-200 with it until it is full.

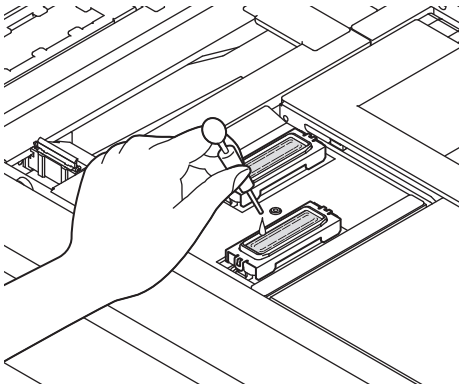

- Fill the cap with the cleaning solution just before the solution overflows from the cap.

Important!

- Do not use the PR-200 maintenance liquid on anything other than the PR-200 mounting head cap, as this may cause nozzle clogging.

9 Press ▲ ▼ to enter the leaving time. (Supported from firmware version 2.9 onward)

- Recommended time is 1 minute.

10 Press the ENTER key.

- The cleaning solution filled in the cap is absorbed.
- The screen on the right is displayed while the cap is left in a cleaning solution
- It returns to the step2 after the duration.

```
PLEASE WAIT
  00:00
```

↓

```
** CLEAMING **
PLEASE WAIT
```

11 Execute head cleaning (HARD) once for the head equipped with PR-200.

(1) Press the [END] key to display the LOCAL screen.
(2) Press the [CLEANING] key, then press ▲ ▼ to select CLEANING: HARD, and press the [ENTER] key.
(3) In SELECT HEAD, press ▲ ▼ to select only Head 3, and press the [ENTER] key.

```
SELECT HEAD
_2
```

12 Check the nozzle status by performing a test print.

- When the nozzle clogging occurs, execute nozzle cleaning (HARD) again then check the nozzle status.

Important!

- If the nozzle clogging is not resolved even after repeating this cleaning 3 times, contact your local distributor, or our sales office or call center.

If nozzle missing due to color mixture of ink or aeration

If nozzle missing occurs due to color mixture of ink in the head or aeration, push ink or air in the head out from the port.

- In order to prevent missing dots beforehand and to use it comfortably, it is recommended to perform the air purge once a month.

1 Select [AIR PG] of the maintenance menu.

(1) Press the FUNCTION key in LOCAL.
(2) Press ▲ ▼ to select [MAINTENANCE] and press the ENTER key.
(3) Press ▲ ▼ to select [AIR PG].

2 Press the ENTER key.

```
SELECT AIR PG
1 <                    > 2
```

3 Press ◀ ▶ and select the ink port for which you perform air purge.

- ◀ : Selects left side port
- ▶ : Selects right side port

- Move the Y bar as far forwards as possible and move the carriage to above the wiper.
- Press the ENTER key to stop it in that position.

```
MOVING NOW
     PLEASE WAIT
```

↓

```
SET TOOL
START                [ENT]
```

4 Open the maintenance cover.

Important!
- After the work has been completed, attach the removed cover as soon as possible. If you leave it for a long time, UV light may affect ink.

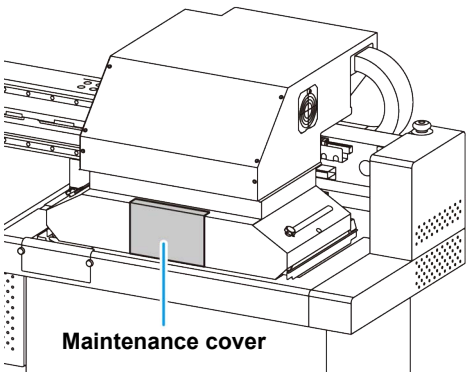

5 Press the ENTER key.

```
SET TOOL
COMPLETED            [ENT]
```

Important!
- Until the air purge jig setting is completed, [COMPLETED [ENT]] is displayed on the screen. After the work up to the Step 8 is completed, press the ENTER key.

6 Open, one at a time, the ink port caps on the side you selected in step 3.

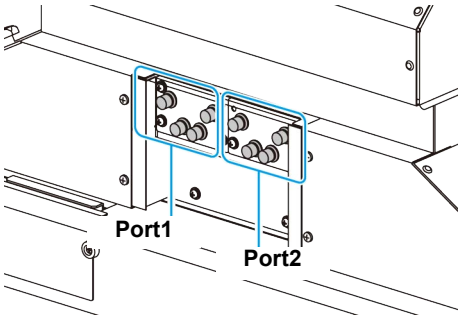

Important!

- Be sure to carry out air purging on only one port at a time.
- Do not open the port cap at the side you did not select in the Step 3. If you open the cap, air is mixed from here.
- When the valve is hard to open, use the attached longnose pliers and open.

7 Set the air purge jig to the ink port valve.

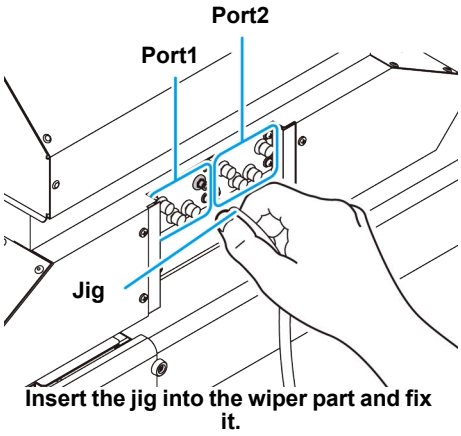

Important!

- There is a magnet attached to the air purge jig's bottle. When attaching the bottle to the unit, attach the bottle to a lower position if possible.

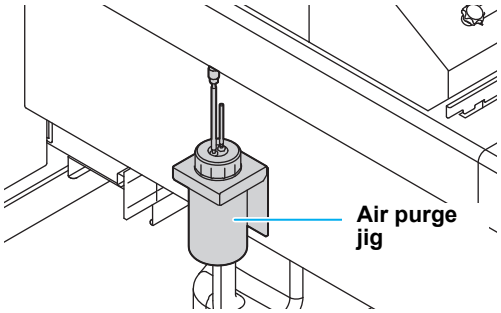

8 Press the ENTER key.

```
AIR PG
START              [ENT]
```

9 Discharge ink or purge air.

```
AIR PG             [PURGE]
COMPLETED          [ENT]
```

- Press the ENTER key to release air from the machine, and completely discharge the ink and other fluids.
- Discharge mixed ink or air completely. When it is discharged completely, clear ink (not mixed) is discharged.
- The buzzer will keep sounding at a fixed interval while ink is being discharged.
- After about 15 seconds, ink discharging will stop automatically and the buzzer will stop sounding.

10 Press the FUNCTION key to weaken ink discharge.

- Press the FUNCTION key to enable ink discharge using minute negative pressure in the machine so that ink cannot easily leak. Be sure to always press the FUNCTION key so that minute negative pressure is applied in the machine before attaching or removing the jig.

11 **Perform the procedures from 9 to 10 on all ports which have to be purged the air.**

- Attach the jig to the port from which you want to purge air and press the FUNCTION key to release air from the machine.

Caution

- The carriage might move rapidly. Be careful not to place hands, your head or other body parts near the carriage.
- Be sure to always press the FUNCTION key so that minute negative pressure is applied in the machine before attaching or removing the jig.

12 **Press the ENTER key.**

```
AIR PG
COMPLETED          [ENT]
```

13 **Press the ENTER key.**

```
REMOVE TOOL
START              [ENT]
```

14 **Remove the jig and attach the cap.**

- When you have removed the jig, quickly attach the cap.

15 **After attaching the cap, press the ENTER key.**

- Negative pressure control restarts and wiping begins.

```
REMOVE TOOL
COMPLETED          [ENT]
```

↓

```
PLEASE WAIT
```

16 **Press ◀ ▶ and select "END" or "RETRY".**

- If "END" is selected, cleaning is performed.
  When cleaning is completed, continue to Step 18.
- If "RETRY" is selected, the display returns to the screen of Step 2.
  Select the other port and perform air purging.

```
AIR PG
END <            > RETRY
```

17 **Press END the key several times to end the setting.**

18 **Close the maintenance cover.**

Important!

- After the work has been completed, attach the removed cover as soon as possible. If you leave it for a long time, UV light may affect ink.

Alternative nozzles for printing, when nozzles missing can not be improved

NOZZLE RECOVERY: When nozzles missing can not be improved at specific points, other good nozzles can be used as alternatives for printing.

The head of this machine consists as the right figure.
You can set the recovery by specifying the nozzle line each for the H1-2 (Head 1-2).

- About nozzle line
- This machine is equipped with four nozzle lines (Line A, Line B, Line C and Line D) for one head.

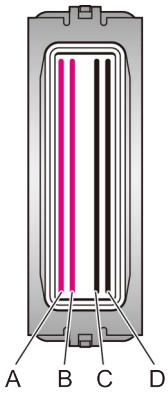

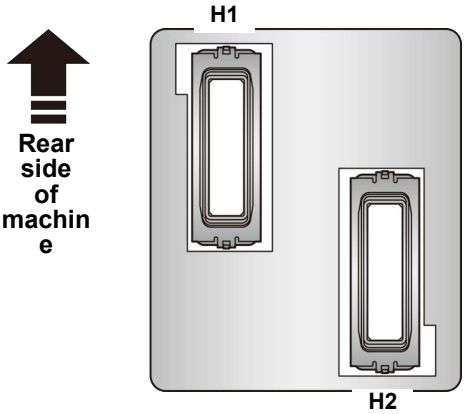

1 Select [NOZZLE RECOVERY] of the maintenance menu.

(1) Press the (FUNCTION) key in LOCAL.
(2) Press (▲) (▼) to select [MAINTENANCE] and press the (ENTER) key.
(3) Press (▲) (▼) to select [NOZZLE RECOVERY].
(4) Press the (ENTER) key.

2 Press (▲) (▼) to select [PRINT] and press the (ENTER) key.

```
NOZZLE RECOVERY
:PRINT
```

↓

```
NOZZLE RECOVERY
:PRINT              [ENT]
```

3 Press the (ENTER) key to start printing.

```
 ** PRINTING **
  PLEASE WAIT
```

- The nozzle pattern is printed.
- When you select “ENTRY” in the Step 2, the machine moves to the nozzle line selection procedures (Step 5) without printing a nozzle pattern.

Nozzle pattern

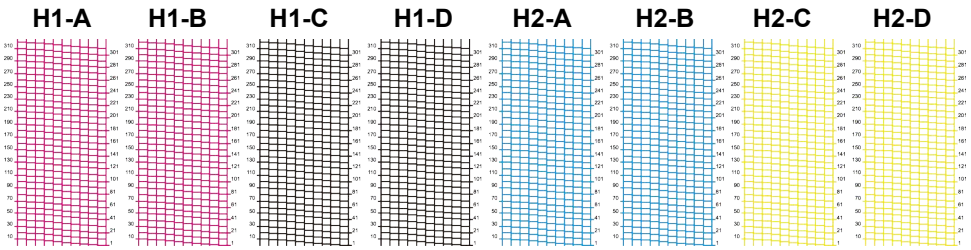

4 Press ▲ ▼ to select the Nozzle line that needs NOZZLE RECOVERY and press the ENTER key.

```
SELECT  NOZZLE
:H1-A
```

Nozzle line: A,B,C,D

Head No.: H1 or

5 Register the Nozzle number that needs NOZZLE RECOVERY and press the ENTER key.

```
H1-A
No.1 184
```

Recovery nozzle No. (1 to 320) or OFF

Registration No.: 1 to 10

(1)

Select the registration number from 1 to 10 by pressing ▲ ▼ and press the ENTER key.

(2) Register the nozzle number that needs recovery by pressing ▲ ▼ and press the ENTER key.

Example of nozzle to be recovered

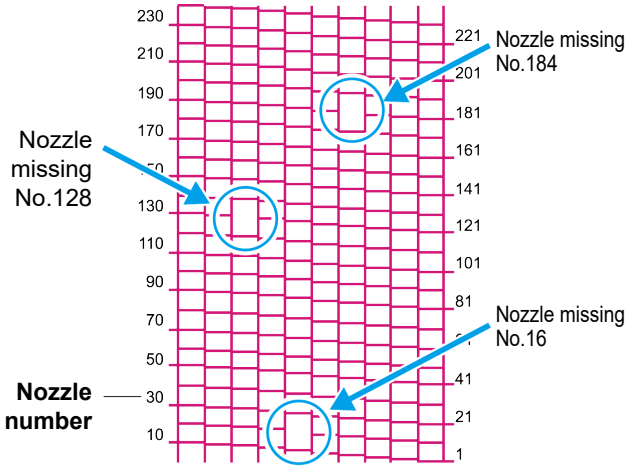

Registration number	Recovery Nozzle No.	State
1	16	Target for nozzle recovery
2	128	Target for nozzle recovery
3	184	Target for nozzle recovery
4	OFF	No registration
5	OFF	No registration

6 Press the END key several times to end the setting.

Important!

- Up to 10 nozzles can be registered per 1 nozzle line.
- Even if you use this function, time required for printing does not change.
- For the lowest number of paths of the printing mode, the NOZZLE RECOVERY function is invalid.
- Even if you register the NOZZLE RECOVERY, the pattern of test print etc. is not recovered.

- When you use white ink, print on the clear film to check.

Check if the registered nozzle is recovered

You can check whether registered nozzle has been successfully recovered.
With the following settings “ON”, you can print a test pattern using a recovered nozzle when test print (☞ P.2-13).

1 **Select [NOZZLE RECOVERY] of the maintenance menu.**

(1) Press the FUNCTION key in LOCAL.
(2) Press ▲ ▼ to select [MAINTENANCE] and press the ENTER key.
(3) Press ▲ ▼ to select [NOZZLE RECOVERY].
(4) Press the ENTER key.

2 **Press ▲ ▼ to select [CONFIRM MENU] and press the ENTER key.**

```
NOZZLE RECOVERY
:CONFIRM MENU
```

3 **Press ▲ ▼ to select “ON” and press the ENTER key.**

```
CONFIRM MENU
:ON
```

4 **Press the END key several times to end the setting.**

- When test print with the recovered nozzle that was registered in the nozzle recovery, please select “ON” in step 3 of P.2-13 “Test Printing”.

At the time of the start of printing, check whether or not there is a nozzle that can not be recovered

Depending on the print conditions that have been set, there are times when it can not be recovered even register the nozzle recovery.
With this setting, whether recoverable or not can be checked and the operation for non recoverable case can be selected.

1 **Select [NOZZLE RECOVERY] of the maintenance menu.**

(1) Press the FUNCTION key in LOCAL.
(2) Press ▲ ▼ to select [MAINTENANCE] and press the ENTER key.
(3) Press ▲ ▼ to select [NOZZLE RECOVERY].
(4) Press the ENTER key.

2 **Press ▲ ▼ to select [CHECK BEFORE PRINT] and press the ENTER key.**

```
NOZZLE RECOVERY
:CHECK BEFORE PRINT
```

3 **Press ▲ ▼ to select a set value and press the ENTER key.**

```
CONFIRM MENU
:ON
```

- **Set value**:OFF, CONTINUE, STOP
- OFF :Does not check at the start of printing.
- CONTINUE :Check at the time of the start of printing. If not recovered, display the right of screen for 3 seconds, and then start printing.

```
1200x1200 32P Hi Bi
UNRECOVERABLE
```

- STOP : Check at the time of the start of printing. If not recovered, display the print confirmation screen. When print, press ENTER.

```
1200x1200 32P Hi Bi
UNRECOVERABLE [ENT]
```

4 **Press the END key several times to end the setting.**

Clear the set value

1 **Select [NOZZLE RECOVERY] of the maintenance menu.**

(1) Press the FUNCTION key in LOCAL.
(2) Press ▲ ▼ to select [MAINTENANCE] and press the ENTER key.
(3) Press ▲ ▼ to select [NOZZLE RECOVERY].
(4) Press the ENTER key.

2 **Press ▲ ▼ to select [CLEAR] and press the ENTER key.**

```
NOZZLE RECOVERY
:CLEAR
```

3 **Press ▲ ▼ to select the Nozzle line that needs reset the setting value and press the ENTER key.**

```
SELECT CLEAR NOZZLE
:H1-A
```

↓

```
H1-A CLEAR?
EXECUTE          [ENT]
```

4 **Press the ENTER key.**

5 **Press the END key several times to end the setting.**

Automatic Maintenance Function

To use this machine comfortably, you can set various maintenances to be performed automatically.
Here, set performing intervals of various automatic maintenances.
You can prevent troubles such as ink clogging by performing automatic maintenance periodically (automatic maintenance function).
For the auto maintenance functions, the following items can be set:

Important!
- When you perform maintenance manually, after manual maintenance is completed and when time set with the automatic maintenance function has passed, maintenance starts automatically.

Function name	Descriptions
REFRESH	The interval between each refreshing operation is set.
CLEANING	The interval between each cleaning operation is set.

Important!
- During the right message is displayed, the operation set in the auto maintenance function is not carried out. Perform the operations of P.4-35 if required.
- When the power button on the front of the machine is turned off, check the waste ink tank.

```
<LOCAL>
Check waste ink[MNT]
```

Setting the Refreshing Intervals

The interval between each operation of ejecting a small amount of ink from the nozzles to prevent nozzle clogging is set.

1 **Select [AUTO MAINT.] of the maintenance menu.**

(1) Press the FUNCTION key in LOCAL.
(2) Press ▲ ▼ to select [MAINTENANCE] and press the ENTER key.
(3) Press ▲ ▼ to select [AUTO MAINT.].

2 **Press the ENTER key.**

```
AUTO MAINT.
REFRESH          [ENT]
```

3 **Press the ENTER key.**

```
REFRESH
:Lv.1
```

4 **Press ▲ ▼ to set the refreshing interval.**

- Set value : OFF, Lv.1, Lv.2, Lv.3
- As the LEVEL increases, the interval between each operation gets shorter.

```
REFRESH    .
:Lv.1
```

5 **Press the ENTER key.**

```
AUTO MAINT.
REFRESH          [ENT]
```

6 **Press END the key several times to end the setting.**

Setting the Cleaning Intervals

The cleaning type and the interval between each cleaning operation are set.

1 **Select [AUTO MAINT.] of the maintenance menu.**

(1) Press the FUNCTION key in LOCAL.
(2) Press ▲ ▼ to select [MAINTENANCE] and press the ENTER key.
(3) Press ▲ ▼ to select [AUTO MAINT.].
(4) Press the ENTER key.

2 **Press ▲ ▼ to select [CLEANING].**

```
AUTO MAINT.
CLEANING          [ENT]
```

3 **Press the ENTER key.**

```
CLEANING
:Lv.1
```

4 **Press ▲ ▼ to set the interval between each cleaning operation.**

```
CLEANING
:Lv.1
```

- Set value : OFF, Lv.1, Lv.2, Lv.3
- As the LEVEL increases, the interval between each operation gets shorter.

5 **Press the ENTER key.**

```
TYPE
:NORMAL
```

- When you set other than “OFF” in the Step 4, the cleaning type selection screen is displayed.

6 **Press ▲ ▼ to select a cleaning type.**

```
TYPE
:SOFT
```

- **Set value** : NORMAL, SOFT, HARD

7 **Press the ENTER key.**

```
AUTO MAINT.
CLEANING          [ENT]
```

8 **Press the END key several times to end the setting.**

Replacing the wiper

The wiper is consumable.When the display indicates that it is necessary to replace the wiper, immediately replace the wiper with a new one.
Also, wipe ink sticking to the lower surface of the slider off.

```
<LOCAL>
Replace a WIPER[MNT]
```

Important! • A cleaning wiper is an option.Buy one through the dealer in your region or at our service office.

1 **When the message is displayed, press the MAINT. key.**

```
REPLACE WIPER
EXECUTE          [ENT]
```

2 **Press the ENTER key.**

• The carriage moves on the table.

```
REPLACE WIPER
COMPLETED        [ENT]
```

Important! • Until the replacement work is completed, [COMPLETED [ENT]] is displayed on the screen. After the work up to the Step 4 is completed, press the ENTER key.

3 **Remove the wiper.**

• Pull out the wiper by holding the protrusions at its both ends.

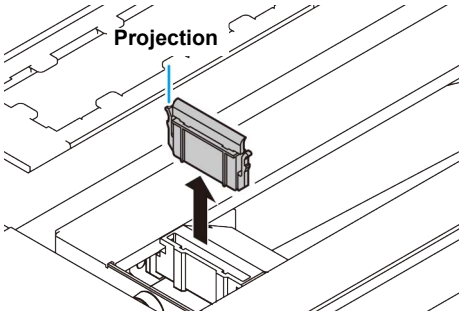

4 **Insert a new wiper.**

• Insert a new wiper by holding its both ends.

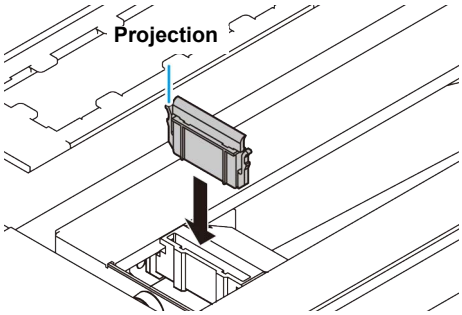

5 **Press the ENTER key.**

• After its initial operation, the machine returns to LOCAL.

```
*Being Initialized*
   PLEASE WAIT
```

If a Waste Ink Tank Confirmation Message Appears

Ink used in head cleaning, etc. is stored in the waste ink tank on the lower right side of the machine. This machine counts the accumulated amount of discharged ink. When that reaches a specified amount, the machine displays a confirmation message.(When this message is displayed, consider the replacement of the waste ink tank.)

- The message is displayed when it reaches 80% (2.1L) of the 2.6L tank.

Confirmation Message in LOCAL

1 **The message on the right is displayed.**

```
<LOCAL>
Check waste ink[MNT]
```

2 **Check the state of the waste ink tank**

- When it is different from the actual amount, press ▲ ▼ and correct.
- When you correct (80%), press the ENTER key to return to LOCAL.
- When you replace (disposal) and clear the count, perform the procedures in “Disposing of waste ink”. (☞ P.4-35)

```
<LOCAL>
Level: 80%(1.6L)
```

Important!

- 廃インクタンクの液量はこまめに確認してください。If you simply delete the message by pressing the ENTER key, and go on using the printer without disposing of the waste ink, then the waste ink could overflow from the waste ink tank.

Disposing of waste ink

Important!

- Be sure to wear the supplied safety glasses and gloves when disposing the waste ink tank. Otherwise, you may get ink in your eyes.
- Do not replace the waste ink tank while this machine operates (during printing or cleaning).
- When waste ink may spill out during the work, wipe it off with a waste cloth etc.

1 **Open the waste ink tank cover.**

- Remove the screw attaching to the waste ink tank cover and open the cover to the front.

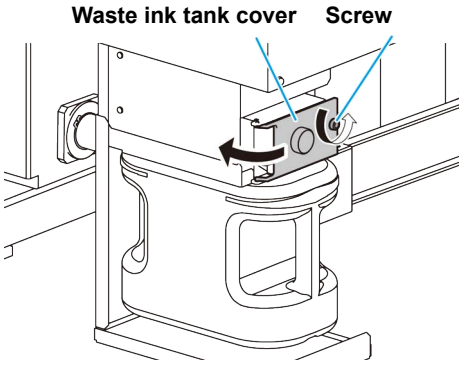

2 **Lift the waste ink tank a little.**

- Lift the waste ink tank up to the position where it does not hit the stopper.

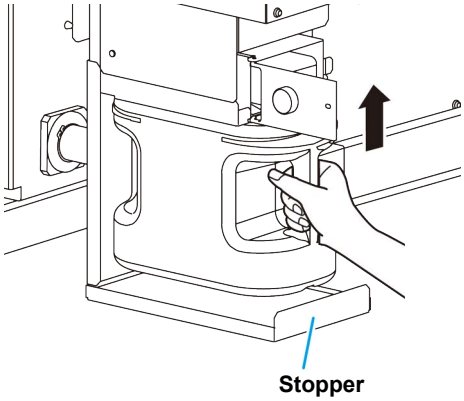

3 **Take out the waste ink tank.**

(1) Hold the handle of the waste ink tank and pull it out to the front.
(2) Put a cap on the waste ink tank removed.

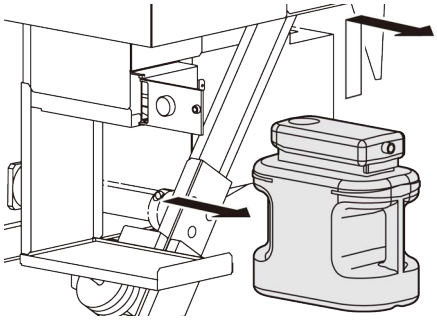

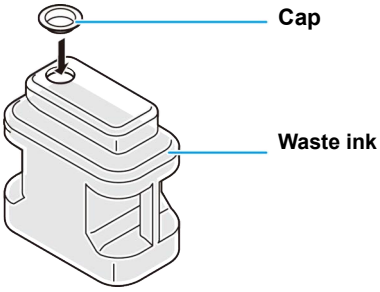

4 Replace the waste ink tank.

(1) Prepare a new waste ink tank (SPA-0197).
(2) Hold the handle of the waste ink tank and insert it along the rail.
(3) Raise the waste ink tank, and check that it is set just below the waste ink discharging spout.

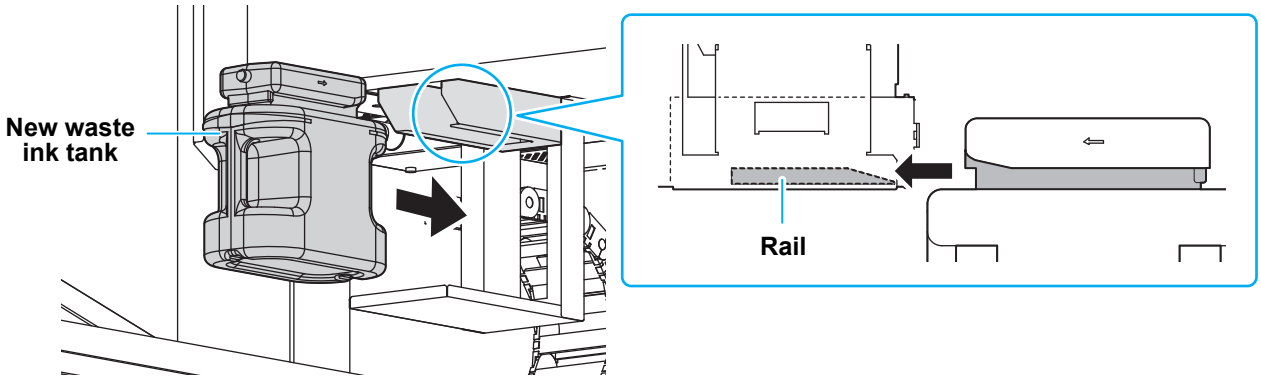

- Request the treatment of waste ink for an industrial waste disposal contractor.
- A part of the ingredients (photo polymerization initiator) has toxicity against aquatic organisms. Please prevent leakage flow to natural water systems (river, etc.) and domestic sewages (toilet, road, etc.)

5 Close the waste ink tank cover.

- When the machine recognizes the waste ink tank, the warning message is released.

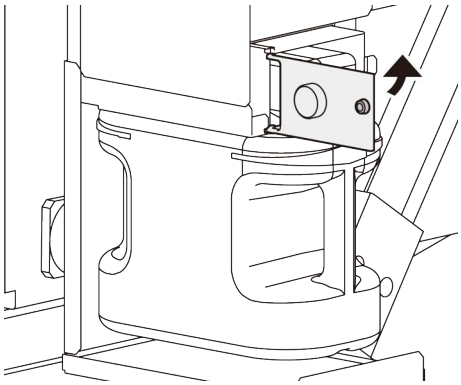

Replacing the waste ink tank before the waste ink tank confirmation message is displayed (1)

if you replace the waste ink tank before the waste ink tank confirmation message is displayed (before the 2L tank is 80% (1.6L) full), set the waste ink information to 0% in the Information menu.

1 **Perform steps in "Disposing of waste ink" (☞ P.4-35) to empty the waste ink tank.**

2 **Press the (FUNCTION) key in LOCAL.**

```
FUNCTION
SETUP              [ENT]
```

3 **Press (▲)(▼) to select [INFORMATION].**

- For the firmware version 1.90 or later, you can also run from the maintenance menu. For the performance from the maintenance, please refer to P4-32.

```
FUNCTION
INFORMATION        [ENT]
```

4 **Press the (ENTER) key.**

```
INFORMATION
USAGE              [ENT]
```

5 **Press (▲)(▼) to select [USAGE].**

6 **Press the (ENTER) key several times until the waste ink tank information is displayed.**

```
WASTE INK TANK
=            60%
```

7 **Press the (MAINT.) key.**

```
Confirm a waste tank
Level: 60%(1.2L)
```

8 **Press (▲)(▼) to set the level "0%".**

```
Confirm a waste tank
Level:  0%(0.0L)
```

9 **Press the (ENTER) key.**

Replacing the waste ink tank before the waste ink tank confirmation message is displayed (2)

Set the waste ink information to 0% in the maintenance menu.

1 **Perform steps in "Disposing of waste ink" (☞ P.4-35) to empty the waste ink tank.**

2 **Press the (FUNCTION) key in LOCAL.**

```
FUNCTION
SETUP              [ENT]
```

3 **Press (▲)(▼) to select [MAINTENANCE].**

```
FUNCTION
MAINTENANCE        [ENT]
```

4 **Press the (ENTER) key.**

```
MAINTENANCE
STATION            [ENT]
```

5 **Press (▲)(▼) to select [InkTankExchange].**

```
MAINTENANCE
InkTankExchange[ENT]
```

6 **Press the (ENTER) key.**

- When you press the ENTER key, the waste ink information will be 0%.

```
WASTE INK TANK
=              60%
```

When you run this menu, it will be the same state as that from the usage to 0% on the previous page

Ink bottle cap replacement

Replace the ink after about one year. For the replacement method, refer to ☞ P.1-13「Replace the ink bottle」

- Pay close attention to ventilation and be sure to wear safety glasses, gloves, and a mask when handling ink, maintenance liquid, waste ink, or other solutions used with the machine. Leaking ink may adhere to the skin or get into the eyes or mouth.

.

Refilling antifreeze mixed water

To cool the LED UV unit, put antifreeze mixed water into the cooling water tank in the cooling device.

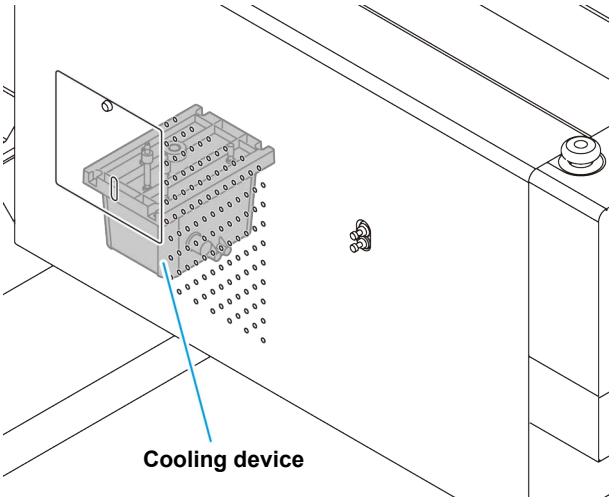

Note on refill

Caution

- Water and antifreeze liquid compound ratio should be 2(water) to 1(Antifreeze liquid).
- When only water is supplied to the cooling water tank without antifreeze liquid, it may damage the UV unit by freeze.
- When only antifreeze liquid is supplied to the cooling water tank without water, the machine does not work properly, and may cause an error.
- If water in the cooling water tank frequently becomes insufficient, contact a distributor in your district or our office.
- Dispose of the waste water mixed with antifreeze liquid pursuant to the regulations of your district.

Important!

- Antifreeze mixture precautions
  (1)Be sure to use water that satisfies the following conditions.
  •Calcium content: Not exceeding 10 mg/L (1 mg/100 ml).
  •Hardness: Not exceeding 60 mg/L.
  •Distilled or purified water.
  (2)Do not use antifreeze mixture that has been prepared far in advance.
  (3)Any excess antifreeze mixture must be used within one week. Filling the machine with antifreeze mixture that has been prepared more than one week in advance may lead to a malfunction.

Precautions in handling the antifreeze liquid

- Be sure to wear goggle and gloves for handling the antifreeze liquid.

- Use the recommended antifreeze liquid by Mimaki. If not, the cooling device may be broken. (Supplied antifreeze liquid :1000cc x 2 bottles)
- Do not touch the antifreeze liquid directly. If the antifreeze liquid settles on your skin or clothes, immediately wash it off with soap and water. If you get antifreeze liquid in your eyes, immediately wash your eyes with a lot of clean water. Then, consult a doctor as soon as possible.
- Store antifreeze liquid in a dark and cold place.
- Store antifreeze liquid in a place that is out of the reach of children.
- When discarding antifreeze liquid which is no longer needed, entrust them to an industrial waste disposal contractor, clarifying their contents.
- Before using antifreeze liquid, be sure to read the Safety Data Sheet (SDS).

- Prepare a tank with a cap to put in the waste water from cooling water tank.
- When water in the cooling water tank is low, an error message is displayed. In this case, replace water in the same way shown as the next page.

```
<LOCAL>
WATER  LACK
```

Refill cooling water

If an error of lack of water, refill cooling water. To fill up its capacity, about 500cc refill is required.

Important!

- If leave the error message of lack of water without refilling cooling water after one week, the error display on the display switches to "REFIL WATER". While this error is on the display, you can not switch to <Remote>. Immediately, replenish the cooling water.
- When continue to use with the error of lack of water and the temperature error/warning of the LED-UV occurs, the display shows “REFIL WATER” and can not switch to <Remote>.

```
<LOCAL>
REFILL  WATER
```

1 **Remove the cover of the left rear surface of the Y bar.**

- Remove the screws (for one position) indicated with circles in the figure and remove the cover.

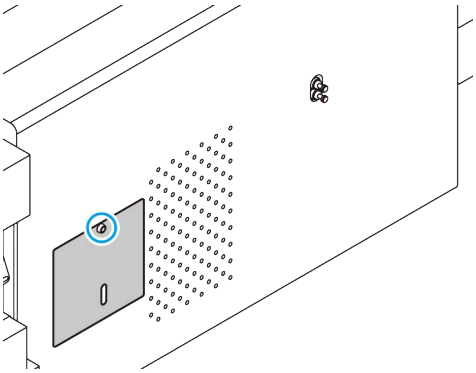

2 **Uncover the water supply/drainage and air vent cover.**

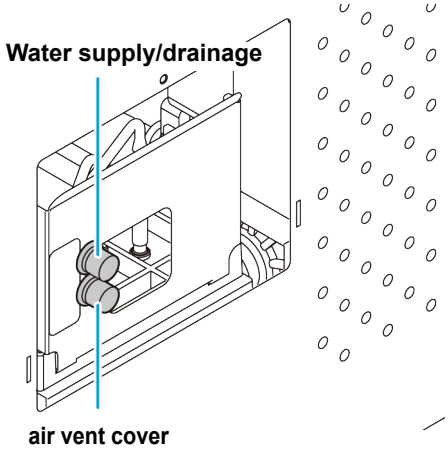

3 **Made mixed water (antifreeze liquid: 1, water: 2) in the attached reservoir and move it to the attached syringe.**

4 Refill antifreeze liquid.

- Fill the antifreeze liquid from the feed-water inlet.
- Fill the syringe with mixed water and inject while checking the level indicator. Stop injecting when the red part is visible.

Important!

- Be sure to check the level indicator as you inject the mixed water. If you fail to check the indicator and inject too much mixed water, the mixed water will leak from the tank.

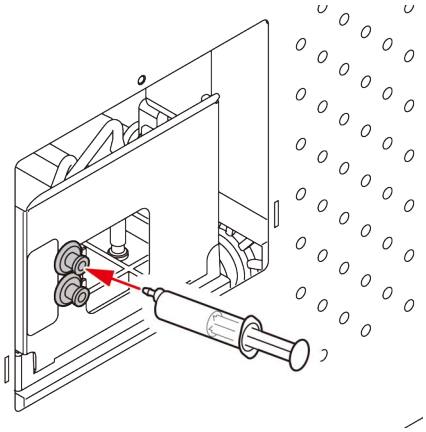

5 Close the feed-water inlet and the air purge cover, and attach the cover of the left rear surface of the Y bar.

Exchange the flushing filter

Tools required for Exchabge	• Cleaning liquid for maintenance (SPC-0568)		
	• Waste cloth	• Gloves	• Safety glasses

Caution

- Be sure to wear the supplied safety glasses and gloves when exchanging theflushing filter. Since the ink is absorbed in the Flushing filter, you may get ink in your eyes.

If a Flushing Filter Exchange Message Appears

The flushing filter needs to be replaced periodically.
Replace the flushing filter when a replacement message such as shown below appears.

1 **When it is time to replace the flushing filter, the message on the right will appear.**

```
FLUSHING FILTER
PLEASE          [ENT]
```

2 **Press the ENTER key.**

- The carriage will move, then the message on the right will appear.

```
EXCANGE
COMPLETED
```

3 **Excahange the flushing filter, and then press the ENTER key.**

- The carriage will return to the station, and the mode will return to LOCAL.

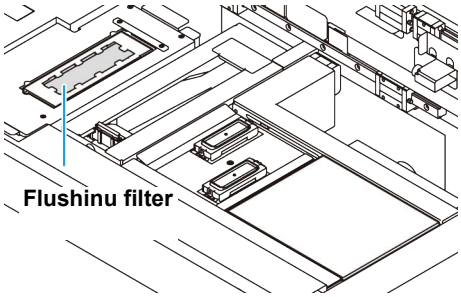

Replacing the flushing filter before the replacement message is displayed

1 **Select [STATION] of the maintenance menu.**

(1) Press the FUNCTION key in LOCAL.
(2) Press ▲ ▼ to select [MAINTENANCE] and press the ENTER key.
(3) Press ▲ ▼ to select [STATION].
(4) Press the ENTER key.

2 **Press ▲ ▼ to select [FLUSHING FILTER].**

```
STATION
FLUSHING FILTER[ENT]
```

3 **Press the ENTER key.**

```
CARRIAGE OUT
START          [ENT]
```

4 **Press the ENTER key.**

```
EXCANGE
COMPLETED      [ENT]
```

Important!

- Until filter exchange is competed, [COMPLETED [ENT]] is displayed on the screen. After the work up to the step 5 is completed, press the ENTER key. If you press the ENTER key before exchange is completed, the machine moves to the next procedure.

5 **Excahange the flushing filter, and then press the ENTER key.**

- The carriage will return to the station, and the mode will return to LOCAL.

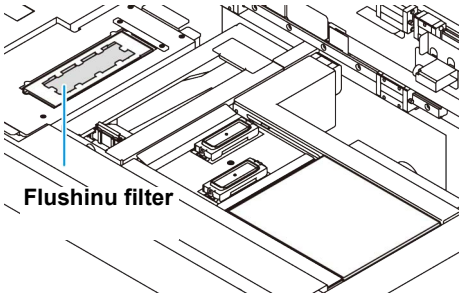

Chapter 5
Troubleshooting

This chapter

describes the corrective measures to be taken for a phenomenon suspected to be trouble and the procedures to clear the error number displayed on the LCD.

Troubleshooting 5-2
Power does not turn on 5-2
The machine does not start printing 5-2
Image quality is poor 5-3
Nozzle is clogged 5-3
Ink bottle warning appears 5-4
If a Message “SHAKE WHITE INK BOTLES” Appears 5-5
If an error related to the sub tank occurs (Error 618 to 61b) 5-6
If negative pressure abnormality occurs 5-7
Warning / Error Messages 5-9
Warning messages 5-9
Error messages 5-12

Troubleshooting

Check again before deciding the trouble as malfunction. If there is no improvement even after troubleshooting, contact your local distributor, or our sales office or call center.

Power does not turn on

In most cases, this is due to improper connection of the power cable for the machine or computer. Check that the power cable is connected properly.

Has the power cable been connected between the machine and a power plug socket ?	**No** →	Securely connect the power cable.
Is the power button located on the front of machine "ON" ?	**No** →	Turn on the power button on the front of the machine. (☞ P.2-3)
Is the emergency switch pressed?	**Yes** →	Pull the emergency switch upward (or rotate), release it. Then, turn on the main power switch. (☞ P.2-3)

The machine does not start printing

This occurs when the data is not being transmitted to the machine properly.
It can also occur when the printing function does not work properly or the media is not set correctly.

Is the correct interface cable used ?	**No** →	Use the cable exclusive for the device.
Is the interface cable properly connected ?	**No** →	Securely connect the interface cable.
↓ **Yes**		
Is the message on the display indicating that ink has run out ?	**Yes** →	Replace the ink bottle with a new one.

Image quality is poor

This section describes the corrective actions to be taken in case the image quality is not satisfactory.
Take remedy for particular problems with image quality. If the remedy does not work, contact your dealer or an office of MIMAKI.

Phenomenon	Measures
White lines / blur / dark stripes (in the direction of travel of the heads)	**(1)** Execute the head cleaning. (☞ P.2-15) **(2)** Perform maintenance of the inside of the station. (☞ P.4-5)
Disagreement in print positions between outward trip and homeward trip	**(1)** Execute the [DROP POSITION] function. (☞ P.3-8)
Ink drops falling on media during printing	**(1)** Execute the wiper cleaning. (☞ P.4-5) **(2)** Execute the ink cap cleaning. (☞ P.4-5) **(3)** Clean around the head. (☞ P.4-13) **(4)** Execute the head cleaning [NORMAL]. (☞ P.2-15) **(5)** Set a shorter interval of INTERVAL WIPING operation. (☞ P.3-20)

Nozzle is clogged

When nozzle clogging is not dissolved even after the head cleaning referring to P.2-15, make sure the recovery the nozzle by the operations of P.4-17.

Ink bottle warning appears

If an ink bottle trouble is detected, the bottle LED “red” is lit, and a warning message appears.
None of printing, cleaning and all the other operations that use ink is available.
If an abnormality occurs, perform the following procedures:

- Check that the IC chip in the ink cover is correctly set.
- Replace the ink bottle in question immediately.

Important!

- Once ink bottle trouble is displayed, do not leave the ink bottle without replacing it for a long time; otherwise, the machine will lose the nozzle clogging prevention function.
  If nozzles are clogged, the machine must be repaired by MIMAKI's service engineer.

Displaying the description of ink bottle trouble

The contents of ink bottle error are confirmable by the following operations.

1 **Press the ENTER key in LOCAL.**

```
LUS-150        MMCCYYKK
REMAIN         34567899
```

2 **Press the ENTER key.**

```
NON INK IC
MMCCYYKK
```

- When multiple bottle defects occur and if you press the ENTER key or ▶ ▶, they are displayed by turns.

If a Message “SHAKE WHITE INK BOTLES” Appears

White ink tends to settle, so you must periodically shake the ink bottles.
If using white ink, a message will be displayed periodically instructing you to shake the white ink bottle. Follow the procedure below to shake the white ink bottle.

```
SHAKE WHITE INK
BOTLES          [ENT]
```

1 Take out the white ink bottle, and slowly shake it twenty times or more.

- To prevent ink from leaking when you shake it, wear gloves and cover the ink bottle cap with a paper towel etc. Being in that status, slowly shake it twenty times and more by flowing ink.

- Before shaking it, check that the cap is firmly closed.
- If you shake it too strong, it may cause ink leakage. Therefore, perform this carefully.
- If the remaining amount of ink is less, ink in the bottle cannot be beaten enough. Tilt the ink bottle until it becomes vertical.

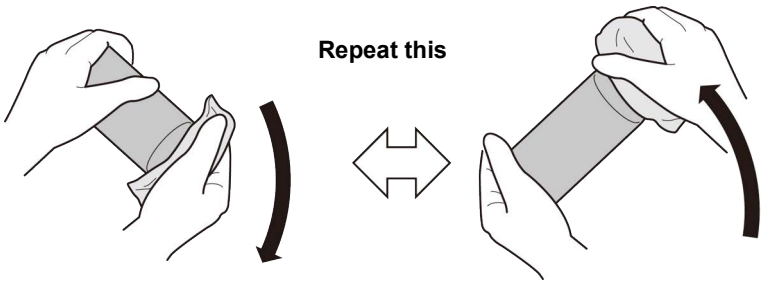

Cover with paper towel firmly and shake ink slowly

2 Set the white ink bottle on the tank, and move the lever on the tank completely from the right to the left side.

- Set the ink bottle while moving the lever on the tank completely to the right.

Important!

- Do not ever rotate the ink bottle at all after setting it into the tank.
  Doing so can result in ink leakage.

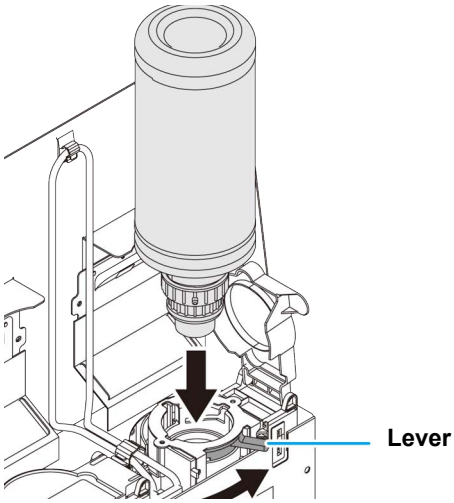

3 Press the ENTER key.

If an error related to the sub tank occurs (Error 618 to 61b)

The Error 618 to 61b are related to the sub tank.
Execute following procedures when an error about sub tank occurs, or when the nozzle is not unclogged after cleaning.

1 **Select [SUB TANK] of the maintenance menu.**

(1) Press the FUNCTION key in LOCAL.
(2) Press ▲ ▼ to select [MAINTENANCE] and press the ENTER key.
(3) Press ▲ ▼ to select [SUB TANK].

2 **Press the ENTER key.**

```
SELECT SUBTANK
:MMKKCCYY
```

3 **Press ▲ ▼ ◀ ▶ and select a sub tank to be maintained.**

```
SELECT SUBTANK
:MMCC____
```

- ◀ ▶ : Select a sub tank.
- ▲ ▼ : Select whether you perform maintenance or not.
- If Error 61b occurs, an appropriate head is selected. Press ENTER key.

4 **Press the ENTER key.**

```
SUB TANK
EXECUTE          [ENT]
```

5 **Press the ENTER key.**

```
** FILL UP **
PLEASE WAIT
```

- The automatic discharging operation and the filling operation are performed.

- Then, cleaning is performed.

```
** CLEANING **
PLEASE WAIT
```

6 **Press END the key several times to end the setting.**

If negative pressure abnormality occurs

By the environment or aging, the pressure controlled in this machine may exceed the control range.
If an error related to pressure abnormality occurs, perform the procedures below:

Important!
- If pressure abnormality occurs, immediately adjust the pressure with the following procedures and return it to the normal value.

1 **Select [PRESSURE ADJUST] of the maintenance menu.**

(1) Press the FUNCTION key in LOCAL.
(2) Press ▲ ▼ to select [MAINTENANCE] and press the ENTER key.
(3) Press ▲ ▼ to select [PRESSURE ADJUST].

2 **Press ▲ ▼ to select POSITIVE or NEGATIVE.**

```
PRESSURE ADJUST
:NEGATIVE
```

3 **Press the ENTER key.**

```
Open Throttle Valve
COMPLETED        [ENT]
```

4 **Rotate the adjustment screw of the throttle valve to release it so that air can flow.**

- Rotate it until the adjustment screw of the throttle valve comes to the middle position.

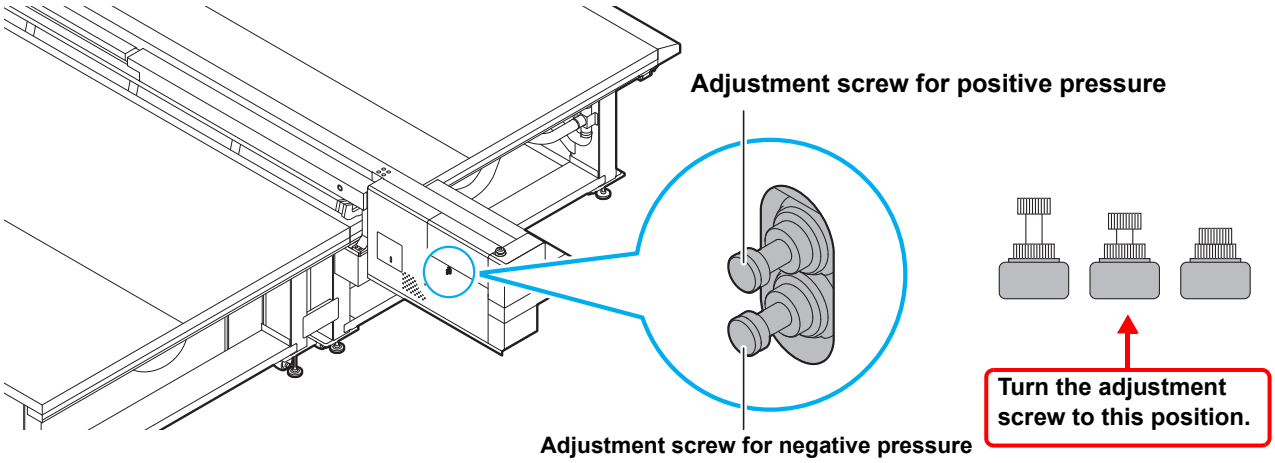

5 **Press the ENTER key.**

- Sensor adjustment starts.

```
** ADJUSTING **
PLEASE WAIT
```

6 **Rotate the adjustment screw of the throttle valve to adjust the pressure so that it becomes the proper value.**

```
PRESSURE
=                -2.70kPa
```

- Proper value of negative pressure: -2.70kPa
  Proper value of positive pressure: 15.00kPa
- As the negative pressure changes between ±0.1 and 0.2kPa, adjust so that the intermediate value may become the target pressure.
- Adjust the throttle valve in order of “negative pressure” → “positive pressure” → “negative pressure”.

7 **Press the ENTER key.**

- The error is released and the negative pressure control starts.

PLEASE WAIT

Important!

- When an error occurs even after you adjusted the pressure, contact your local distributor, our sales office, or service center.

Warning / Error Messages

If some trouble occurs, the buzzer sounds and the display shows a corresponding error message.
Take an appropriate remedy for the displayed error.

Warning messages

Errors when performing operations

Message	Cause	Solution
CAN'T OPERATE INK ERROR	An ink error occurred.	• Check the ink bottle for the supply path corresponding to the indicated color.
CAN'T OPERATE DATA REMAIN	Data was received.	• Perform data clear. (☞ P.2-17)

Message displayed in LOCAL

Message	Cause	Solution
<LOCAL> Can'tPRINT/CART.[ENT]	Ink errors (unusable ink) occur in multiple ink bottles. Ink supply (print, cleaning, etc.) cannot be performed.	• Press the ENTER key to check the ink bottle generating the warning. Replace them with usable ink bottles.
<LOCAL> Check waste ink[MNT]	The waste ink tank is nearly full.	• Check the waste ink tank.
<LOCAL> Replace a WIPER[MNT]	Time to replace the wiper in the capping station with a new one has come. (The wiping count has reached the specified value.)	• Press the MAINT. key and replace the wiper with a new one. (☞ P.4-33)
<LOCAL> DATA REMAIN	The data has been received.	• Press the key to perform printing. Or, perform data clear.
<LOCAL> WATER LACK	Water in the cooling water tank becomes less.	• Refill cooling water according to P.4-39 "Refilling antifreeze mixed water".
<LOCAL> REFILL WATER	It has been 7 days or more since water of cooling water tank is running low.	• Refill cooling water according to P.4-39 "Refilling antifreeze mixed water". • While this warning is displayed, on-line printing can not be done.
<LOCAL> UV LAMP TEMP. HIGH	The LED lamp temperature is high.	• Wait for a while until the temperature lowers and the message disappears.

Message	Cause	Solution
<LOCAL> NEGATIVE PRESSURE	The value of the negative pressure sensor is abnormal.	• Perform “PRESSURE ADJUST” (☞ P.5-7) of the maintenance. If you cannot adjust it to the normal value, or, even if you perform, it may be displayed, contact your local distributor, our sales office, or service center.
<LOCAL> POSITIVE PRESSURE	The value of the positive pressure sensor is abnormal.	
<LOCAL> INK NEAR END [ENT]	The ink of the ink bottle has been nearly used up. There is little ink in the supply unit.	• Press the ENTER key to check the relevant ink bottle. Be careful because it may be INK NEAR END soon.
<LOCAL> SUPPLY INK :MMCCYYKK	Ink could not be supplied to the sub tank.	• Perform “SUB TANK” (☞ P.5-6) of the maintenance. Also check the remaining amount of ink in the ink bottle. Even if you performed this, when the message is displayed, contact your local distributor, our sales office, or service center.
<LOCAL> SubtankSens:MMCCYYKK	The liquid level sensor abnormality of the sub tank has been detected.	• Turn off the power on the machine and turn it on after a while. When displaying again, contact your local distributor, our sales office, or service center.
<LOCAL> InkOverflow:MMCCYYKK	Overflow from the sub tank has been detected.	• Perform “SUB TANK” (☞ P.5-11) of the maintenance. Even if you performed this, when the message is displayed, contact your local distributor, our sales office, or service center.
<LOCAL> TANKlevrlH :MMCCYYKK	Though a certain amount was consumed, there is no change in the sub tank sensor High.	
<LOCAL> TANKlevrlL :MMCCYYKK	Though a certain amount was consumed, there is no change in the sub tank sensor Low.	
<LOCAL> MachineTEMP/Hi ***°C	The machine temperature is high.	Adjust the ambient temperature of the installation place.
<LOCAL> MachineTEMP/Lo ***°C	The machine temperature is low.	
<LOCAL> Replace SupplyPUMP	The supply pump in the ink path shall be replaced soon.	• The supply pump shall be replaced. Contact a distributor in your district, our office, or our call center.
<LOCAL> Replace SuctionPUMP	The suction pump in the ink path shall be replaced soon.	• The suction pump shall be replaced. Contact a distributor in your district, our office, or our call center.
<LOCAL> Replace Ymotor Brush	Time to replace the brush of Y motor has come.	• The brush of Y motor shall be replaced. Contact a distributor in your district, our office, or our call center.

Ink Error

Ink error is displayed also in the local guidance. (☞ P.3-30)

Message	Cause	Solution
NON INK IC :---- YYKK	The IC chip of the ink bottle cannot be read normally.	• Remove the ink bottle generating the warning once and install it again. When displaying again, contact your local distributor, our sales office, or service center.
WRONG INK IC :---- YYKK		
KIND OF INK :---- YYKK	The ink of the ink bottle is different in type from the ink currently supplied.	• Check the ink type of the ink bottle generating the warning.
COLOR OF INK :---- YYKK	The ink of the ink bottle is different in color from the ink currently supplied.	• Check the ink color of the ink bottle generating the warning.
WRONG INK BOTTLE :---- YYKK	An error occurred in the IC chip information of the ink bottle.	• Check the ink bottle generating the warning.
NO INK BOTTLE :---- YYKK	The ink bottle is not set on the external ink supply unit.	• Set the ink bottle on the bottle holder with the warning.
EXPIRATION :---- YYKK	The ink has expired.	• Replace with new ink or use up as quickly as possible. Printing is possible. ☞ P.1-13 "Replace the ink bottle"
EXPIRATION(1MONTH) :---- YYKK	The ink is one month past its expiration date and cannot be used.	• Replace with new ink or use up as quickly as possible. Printing is possible. ☞ P.1-13 "Replace the ink bottle"
EXPIRATION(2MONTH) :---- YYKK	The ink is two months past its expiration date and cannot be used.	• Replace with new ink. Printing will be unavailable soon.☞ P.1-13 "Replace the ink bottle"

Error messages

When an error message is displayed, eliminate the error according to the chart below.
When displaying again, contact your dealer or an office of MIMAKI to call for service.

Message	Cause	Solution
ERROR 04 PARAM ROM	There is an abnormality in the parameters.	• Turn off the power on the machine and turn it on after a while. When displaying again, contact your local distributor, our sales office, or service center.
ERROR 108 HD CONNECT[12345678]	Head connection can not be confirmed.	
ERROR 108 HD THERMIS[12345678]	Head temperature can not be read.	
ERROR 12a HDC SPEED	An abnormality occurred in the ink discharge waveform.	
ERROR 12e Head Failed[xxxx]	Abnormality of the Driver of the Print head.	
ERROR 122 CHECK:SDRAM	There is no PRAM.	
ERROR 128 HDC FIFO OVER	Data transmission speed is too fast. Control circuit board is defective.	
ERROR 128 HDC FIFO UNDER	Data transmission speed is too slow. Control circuit board is defective.	
ERROR 129 BATTERY EXCHANGE	The battery life end of the internal clock is detected.	• Contact your local distributor, our sales office, or service center.
ERROR 130 HD DATA SEQ	Head data transferring sequence error occurred.	• Turn off the power on the machine and turn it on after a while. When displaying again, contact your local distributor, our sales office, or service center.
ERROR 148 E-LOG SEQ	Sequential number abnormality of the event log occurred.	
ERROR 151 Main PCB V12R	An error occurred in the main PCB 1.2V power supply.	
ERROR 152 Main PCB V2R5	An error occurred in the main PCB 2.5V power supply.	
ERROR 153 Main PCB V3R3	An error occurred in the main PCB 3.3V power supply.	
ERROR 154 Main PCB V05	An error occurred in the main PCB 5V power supply.	
ERROR 155 Main PCB V35-1	An error occurred in the main PCB 35-1 power supply.	
ERROR 156 Main PCB V5B	An error occurred in the main PCB 5VB power supply.	
ERROR 157 Main PCB VTT	An error occurred in the main PCB VTT power supply.	

Message	Cause	Solution
ERROR 158 Main PCB V352	An error occurred in the main PCB 35-2V power supply.	• Turn off the power on the machine and turn it on after a while. When displaying again, contact your local distributor, our sales office, or service center.
ERROR15f HEAD DRIVE HOT	COM driver becomes the high temperature.	
ERROR 16e Main PCB V3R3B	An error occurred in the main PCB 3.3VB power supply.	
ERROR 171 NEW HEAD CONNECT	New Print Head was recognized.	
ERROR 172 Main PCB Q6 Check K	The main PCB Q6 is disabled (short mode).	
ERROR 186 HDC OVERFLOW	An error is detected on the waveform printed on.	
ERROR 186 HDC UNDERFLOW		
ERROR 187 HDC SLEW RATE		
ERROR 188 HDC MEMORY		
ERROR 18a Main PCB V_CORE	An error occurred in the main PCB power supply.	
ERROR 18b Main PCB V1R5B	An error occurred in the main PCB 1.5V power supply.	
ERROR 18b Main PCB V12	An error occurred in the main PCB 12V power supply.	
ERROR 18e FLS NOT COMP [12__]	An error occurred in the flushing control.	
ERROR 18f OFFSET START [12__]	An error occurred in the head voltage control.	
ERROR 18f OFFSET END [12__]		
ERROR 19d HDC V36 [12__]	An error occurred in the HDC PCB voltage control.	
ERROR 19f LED CONNCT ERR:*****	The LED UV is not connected.	
ERROR 201 COMMAND	The machine received some data other than command data.	• Securely connect the interface cable in position. • Use an interface cable conforming to the specifications.
ERROR 202 PARAMETER	Any parameter outside the range of acceptable numeric values was received.	
ERROR 203 Ment Command	A maintenance command error occurred.	

Message	Cause	Solution
ERROR 304 USB INIT ERR	USB device initialization failure.	• Turn off the power on the machine and turn it on after a while. When displaying again, contact your local distributor, our sales office, or service center.
ERROR 305 USB TIME OUT	Occurrence of a time out error on a USB device.	
ERROR 401 MOTOR X	An excessive load was applied to the X motor.	
ERROR 402 MOTOR Y	An excessive load was applied to the Y motor.	
ERROR 403 X CURRENT	An error due to an excessive current of the X motor was detected.	
ERROR 404 Y CURRENT	An error due to an excessive current of the Y motor was detected.	
ERROR 444 Y MOTOR BRUSH	Time to replace the brush of Y motor has come.	• The brush of Y motor shall be replaced. Contact a distributor in your district, our office, or our call center.
ERROR 505 MEDIA JAM	The media jam occurs.	• Remove the media and reset it.
ERROR 509 HDC POSCNT	A HDC position counter error occurred.	• Turn off the power on the machine and turn it on after a while. When displaying again, contact your local distributor, our sales office, or service center.
ERROR 50a Y ORIGIN	Y-origin could not be detected.	
ERROR 50f L-SCALE BLACK	Abnormal linear scale.	
ERROR 510 X ORIGIN	X-origin could not be detected.	
ERROR 519 NEGATIVE P.SENSOR	The value of the negative pressure sensor is abnormal.	• Perform “PRESSURE ADJUST” (☞ P.5-7) of the maintenance. If you cannot adjust it to the normal value, or, even if you perform, it may be displayed, contact your local distributor, our sales office, or service center.
ERROR 51a POSITIVE P.SENSOR	The value of the positive pressure sensor is abnormal.	
ERROR 617 SUBTANK SNN:12345678	The liquid level sensor abnormality of the sub tank has been detected.	• Turn off the power on the machine and turn it on after a while. When displaying again, contact your local distributor, our sales office, or service center.
ERROR 618 TANKlevelH :12345678	Though a certain amount was consumed, there is no change in the sub tank sensor High.	• Perform “SUB TANK” (☞ P.5-6) of the maintenance. Even if you performed this, when the message is displayed, contact your local distributor, our sales office, or service center.
ERROR 619 TANKlevelL :12345678	Though a certain amount was consumed, there is no change in the sub tank sensor Low.	
ERROR 61a OVER FLOW :12345678	Overflow from the sub tank has been detected.	

Message	Cause	Solution
ERROR 61b SUPPLY INK :12345678	Ink could not be supplied to the sub tank.	• Perform "SUB TANK" (☞ P.5-6) of the maintenance. Also check the remaining amount of ink in the ink bottle. Even if you performed this, when the message is displayed, contact your local distributor, our sales office, or service center.
ERROR 61c NEGATIVE P.CONTROL	Starting of the negative pressure control has an abnormality.	• Perform "PRESSURE ADJUST" (☞ P.5-7) of the maintenance. If you cannot adjust it to the normal value, or, even if you perform, it may be displayed, contact your local distributor, our sales office, or service center.
ERROR 61d NEGATIVE P.NotEnough	The negative pressure cannot be kept properly	
ERROR 61e NEGATIVE P. OVER		
ERROR 61f POSITIVE P.CONTROL	Starting of the positive pressure control has an abnormality.	
ERROR 620 POSITIVE P.NotEnough	The positive pressure cannot be kept properly.	
ERROR 621 POSITIVE P. OVER		
ERROR 637 INK LEAK 1--	The ink leakage is detected in the ink supply path.	• Turn off the power on the machine and turn it on after a while. When displaying again, contact your local distributor, our sales office, or service center.
ERROR 702 THERMISTOR	The thermistor of a heater is defective.	
ERROR 706 DRV OVHT 0**0**	UVLED Driver circuit board is very hot.	
ERROR 707 !H1 HEATER BREAK	A head heater is disconnected.	
ERROR 714 INK HEATER COM ERR	Communication error of ink heater circuit board.	
ERROR 715 InkHeaterRThr:12	Abnormal Ink heater thermistor.	
ERROR 715 InkHeaterFThr:12		
ERROR 716 InkHeaterRTmp:12	Anomaly temperature of ink heater.	• Turn OFF the power of the machine and turn it ON again after a while. When the power is ON, the screen for selecting whether to control the ink heater is displayed. • Press the [>] (START) key and start the control of ink heater. If still display, please call for our service or our dealer
ERROR 716 InkHeaterLTmp:12		

Message	Cause	Solution
ERROR 717 InkHeaterRBrk:12	Ink heater is disconnected.	• Turn off the power on the machine and turn it on after a while. When displaying again, contact your local distributor, our sales office, or service center.
ERROR 717 InkHeaterLBrk:12		
ERROR 718 InkHeaterPCB Thr:12	Abnormal thermistor of the ink heater PCB.	
ERROR 719 InkHeaterPCB Fuse:12	Ink heater PCB fuse is out.	• Turn off the power on the machine and turn it on after a while. When displaying again, contact your local distributor, our sales office, or service center.
ERROR 71A UV-DRV Fuse :******	UVLED diver circuit board fuse has blown.	
ERROR 711 LED OVHT 0**0**	UVLED circuit board is very hot.	
ERROR 902 DATA REMAIN	There remains received data that has not yet been printed.	• Execute the data clear function. (☞ P.2-17)
ERROR 90d NO HEAD SELECT	The number of mounted heads is 0 (zero).	• Turn off the power on the machine and turn it on after a while. When displaying again, contact your local distributor, our sales office, or service center.
ERROR 910 ENVIRONMENT TEMP(LO)	The ambient temperature is out of the usable temperature range (too low).	• Adjust the ambient temperature of the installation place.
ERROR 911 ENVIRONMENT TEMP(HI)	The ambient temperature is out of the usable temperature range (too high).	

SYSTEM HALT

Message	Solution
SYSTEM HALT 000: MESSAGE	Turn off the power on the machine and turn it on after a while. Check the number and contact your local distributor, our sales office, or service center. (“000” is the error No.)

Chapter 6
Appendix

This chapter

contains the lists of the specifications and functions of this machine.

Specifications 6-2
Machine specifications 6-2
Ink specifications 6-3
Order of ink bottles 6-4
Sheet for inquiry 6-5
Function Flowchart 6-6

Specifications

Machine specifications

Item		Specifications
Print head	Method	Drop-on-demand piezoelectric print heads
	Specification	2 heads: 2-layered staggered arrangement in 1-line
Printing mode (scan x feed)	4-colors	300x450HQ : Bi/Uni 6/12 pass 600x600 : Bi/Uni 8/16 pass 600x900 : Bi/Uni 12/24 pass 1200x1200 : Bi/Uni 16/32 pass
	4-colors + White	300x450HQ : Bi/Uni 12/24 pass 600x600 : Bi/Uni 16/32 pass 600x900 : Bi/Uni 24/48 pass 1200x1200 : Bi/Uni 32/64 pass
Usable inks		Dedicated UV curable in (C, M, Y, K, Lc, Lm, W, CL, Pr)
Ink supply		Supplying 1L x 8 bottles (For 4-color, UISS switching is available. Also, UISS switching is available for C and M with 4-color + W)
Capacity of ink bottle	4-colors	1L-bottle x 2 for each color
	4-colors + White	Y and K: 1 bottle each. C, M and W: 2 bottles each.
	4-colors + White + Clear	C, M, Y and K: 1 bottle each. W and CL: 2 bottles each.
	4-colors + White + Clear + Primer	C, M, Y, K, CL and Pr: 1 bottle each. W: 2 bottles.
	6 colors + White	C, M, Y, K, Lc and Lm: 1 bottle each. W: 2 bottles.
Usable media	Size	2,580 mm x 2,040 mm (101.6 in x 80.3 in)
	Thickness	Less than 50 mm (Less than 1.97 in)
	Weight	Up to 50 kg (110.2 lb) / m^2. Prohibit concentrated load.
Max. printing width		2,500 x 1,300mm (98.4 x 51.2 in)
Distance accuracy	Absolute accuracy	Whichever the larger one of ± 0.3 mm or ± 0.3 % of the designated (Whichever the larger one of ± 0.012 in or ± 0.3 % of the designated)
	Reproducibility	Whichever the larger one of ± 0.2 mm or ± 0.1 % of the designated (Whichever the larger one of ± 0.0079 in or ± 0.1 % of the designated)
Perpendicularity		± 0.5 mm / 500 mm (± 0.020 in / 19.7 in)
Head height adjustment		1.2 mm to 3 mm (0.047 in to 0.12 in) (media thickness automatic recognition)
Media absorption		Absorption fixing with vacuum unit
UV unit		UV LED lamp fitting (mounted on carriage) UV power is mounted in the main body.
Waste ink tank		Bottle type (2,600 cc)/ Detected by software counter
Interface		USB 2.0
Command		MRL- III
Noise	during standby	Less than 55 dB
	At operation *1	Less than 75 dB
Safety Standard		VCCI-Class A, FCC-Class A, UL 60950, CE Marking (EMC,Low Voltage Directive, Machinery Directive), CB Report, RoHS
Power		AC200 - 240 ± 10% , 50/60Hz ± 1Hz , 12A or less
Power consumption		2,880W or less
Recomended Environment	Available temp.	15 °C to 30 °C (59 °F to 86 °F)
	Humidity	35 to 65% Rh (No condensation)
	Guaranteed temp.	20 °C to 25 °C (68°F to 77°F)
	Temperature change	± 10 °C (50 °F) / h or less
	Dust	0.15 mg/m^3 (Equivalent to normal office level)
Weight		650 kg (1,433 lb)
Outside dimensions		4,400 mm(W) x 2,450 mm(D) x 1,250mm(H) (Including projection) (173.2 in(W) x 96.5 in(D) x 49.2 in(H) (Including projection))

*1. 73.5db(A), Operation condition: High-speed scanning, Blower is ON
Method: According to clause 1.7.4.2 of Machinery Directive 2006/42/EC

Ink specifications

Item		Specifications
Supply		1L Ink bottle
Color		Black ink Cyan ink Magenta ink Yellow ink White ink Light cyan (only LUS150 ink) Light magenta (only LUS150 ink) Clear ink (LH100 ink, LUS120 ink) Primer ink (PR-100, PR-200)
Ink capacity		1 liter
Shelf life		The period is printed on the ink bottle. Within three months after opening the package even in the available period.
Storage temperature	Storage	5 to 30˚C (41 to 86˚F) (Storage at temperature of 30˚C (86 ˚F) is permitted within a month.)
	Transportation	1 to 60˚C (33.8 to 140˚F) (Storage at temperature of 60˚C (140 ˚F) is only permitted within 120 hours, and at temperature of 40˚C (104 ˚F) is permitted within a month.)

Important!

- **Do not use any ink other than MIMAKI designated ink.**
  Also, do not disassemble the ink bottles or refill or replenish their ink.
- **Ink could freeze if kept in a cold place for an extended period.**
  - If the ink freezes, thaw it at room temperature (25°C (77 ˚F)) spending Over three hours before use.However, when you use the frozen ink, the printing quality becomes degraded due to altered ink. Store ink in the environment where ink may not freeze.

Order of ink bottles

The order of the ink bottles that are set differs depending on the ink set that is used.

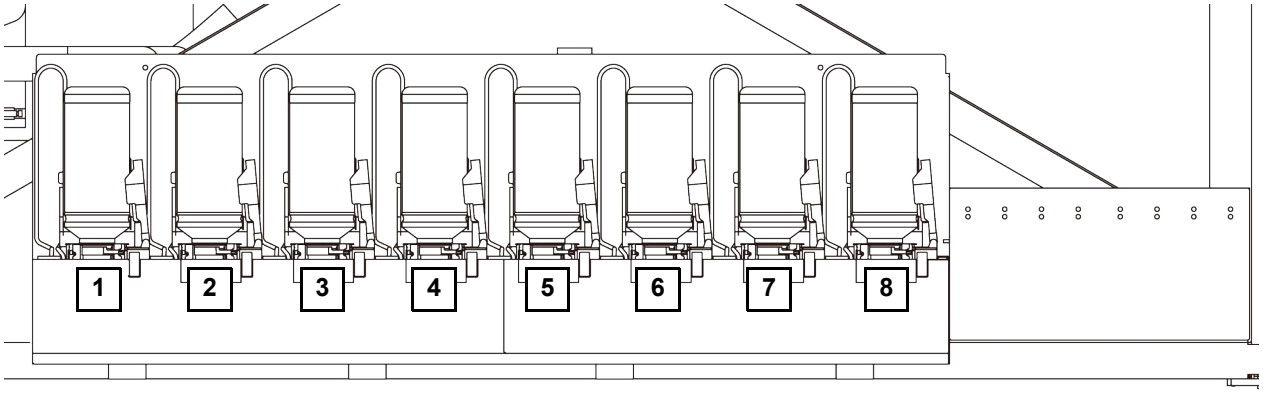

Ink Set	Installation Location							
	1	2	3	4	5	6	7	8
4 colors	M	M	K	K	C	C	Y	Y
4 colors + white ink	M	K	C	Y	M	C	W	W
4 colors + clear + white ink	M	K	C	Y	Cl	Cl	W	W
4 colors + clear + primer + white ink	M	K	C	Y	Cl	P	W	W
6 colors + white ink	M	K	C	Y	Lm	Lc	W	W

Sheet for inquiry

Use this sheet for troubles and abnormal functions of the machine.
Fill in the following necessary items, and then fax the sheet to our sales office.

Company name	
Person in charge	
Telephone number	
machine model	
Operating OS	
Machine information *1	
Error message	
Contents of inquiry	

*1. Refer to "Confirming Machine information" of "Convenient using" then fill in necessary information. (☞ P.3-28)

Function Flowchart

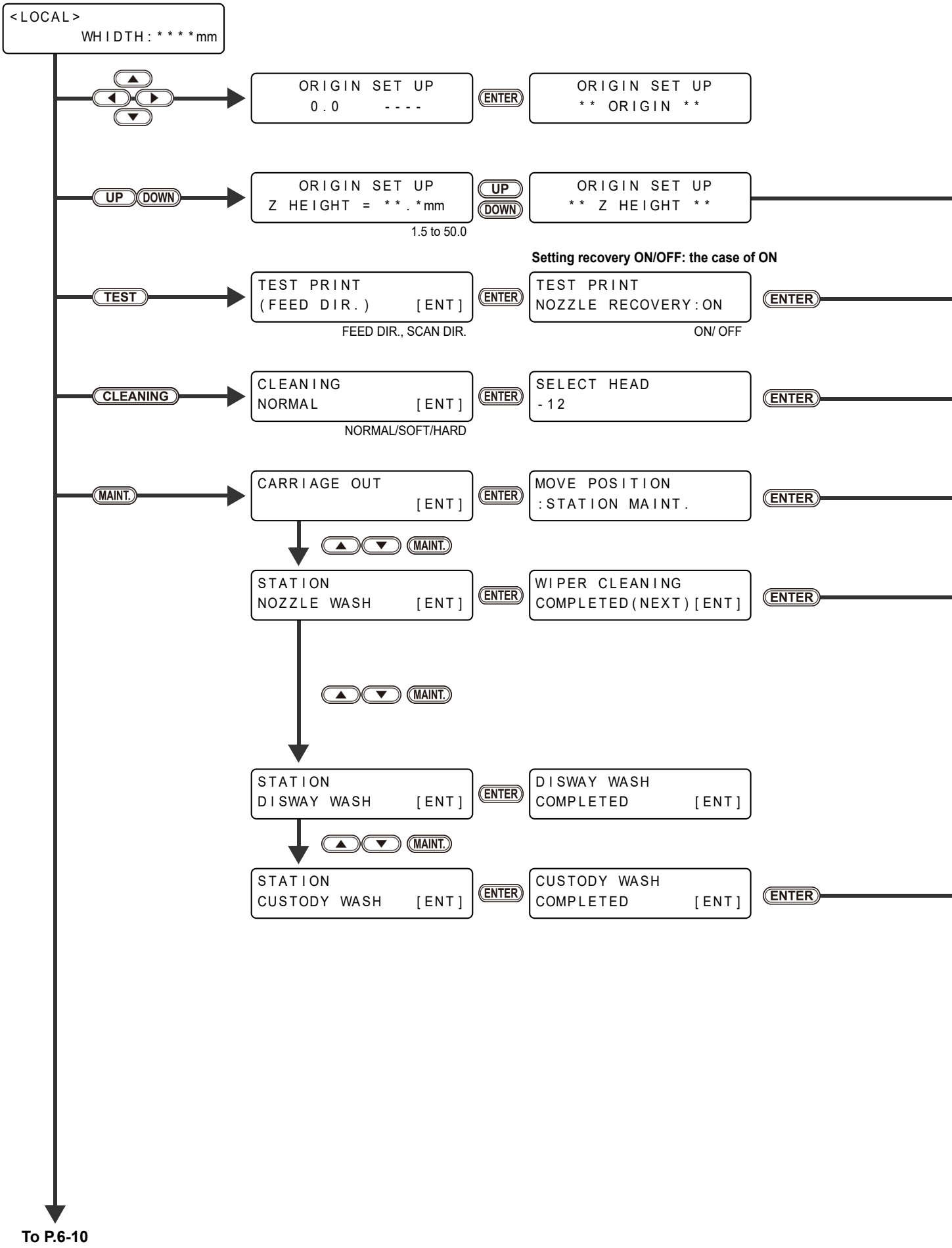

To P.6-10

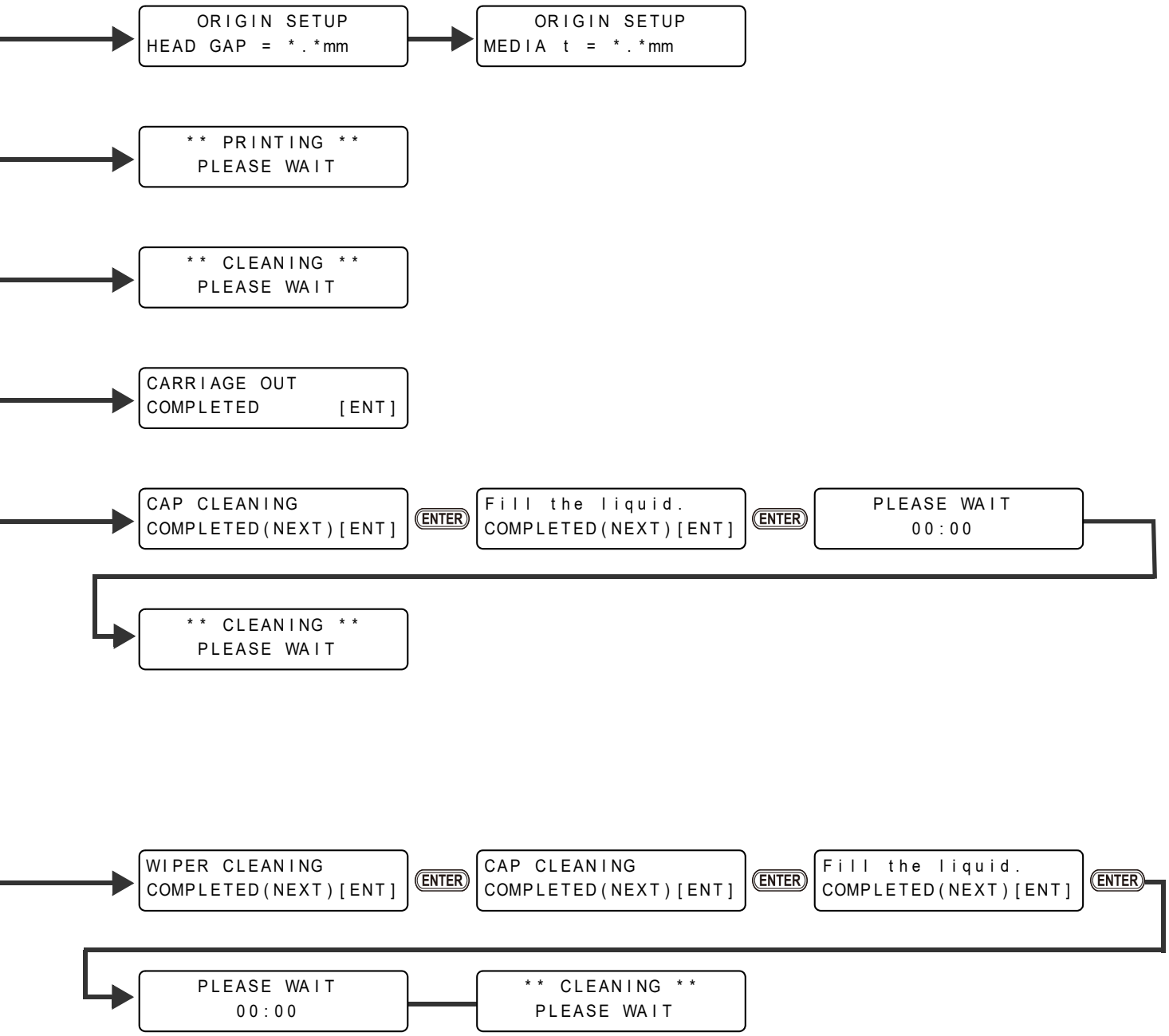
ORIGIN SETUP
HEAD GAP = *.*mm
ORIGIN SETUP
MEDIA t = *.*mm
** PRINTING **
PLEASE WAIT
** CLEANING **
PLEASE WAIT
CARRIAGE OUT
COMPLETED [ENT]
CAP CLEANING
COMPLETED(NEXT)[ENT]
ENTER
Fill the liquid.
COMPLETED(NEXT)[ENT]
ENTER
PLEASE WAIT
00:00
** CLEANING **
PLEASE WAIT
WIPER CLEANING
COMPLETED(NEXT)[ENT]
ENTER
CAP CLEANING
COMPLETED(NEXT)[ENT]
ENTER
Fill the liquid.
COMPLETED(NEXT)[ENT]
ENTER
PLEASE WAIT
00:00
** CLEANING **
PLEASE WAIT

From P.6-8

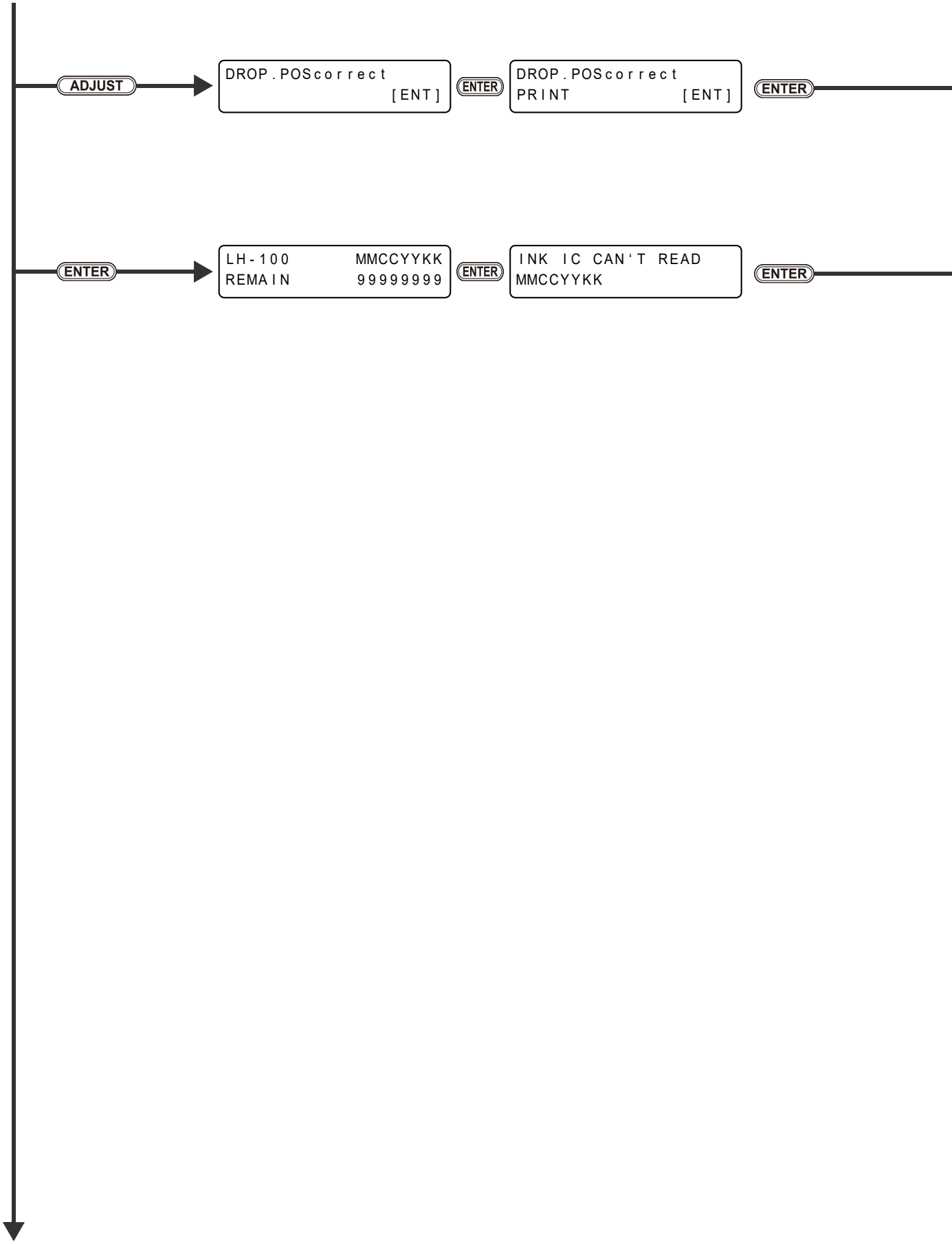

To P.6-12

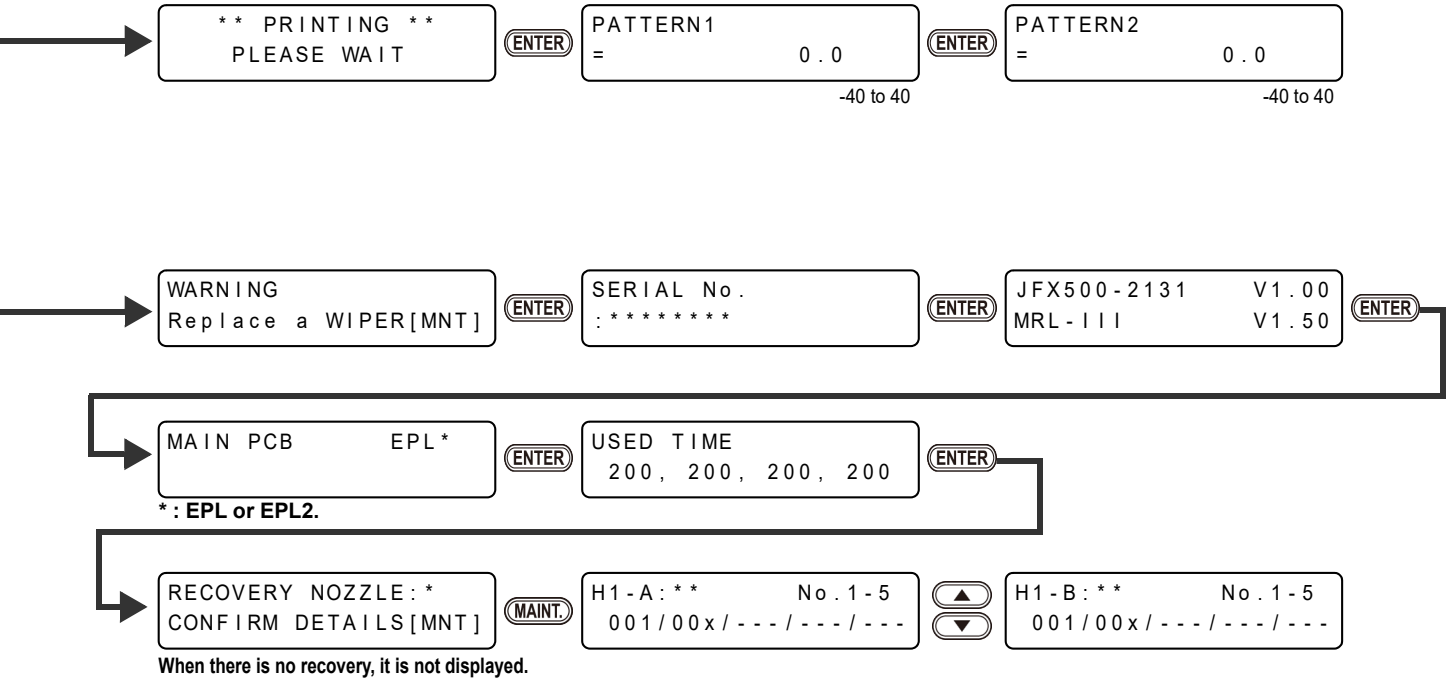
** PRINTING **
PLEASE WAIT
ENTER
PATTERN1
= 0.0
-40 to 40
ENTER
PATTERN2
= 0.0
-40 to 40
WARNING
Replace a WIPER[MNT]
ENTER
SERIAL No.
:********
ENTER
JFX500-2131 V1.00
MRL-III V1.50
ENTER
MAIN PCB EPL*
ENTER
USED TIME
200, 200, 200, 200
ENTER
* : EPL or EPL2.
RECOVERY NOZZLE:*
CONFIRM DETAILS[MNT]
MAINT.
H1-A:** No.1-5
001/00x/---/---/---
H1-B:** No.1-5
001/00x/---/---/---
When there is no recovery, it is not displayed.

From P.6-10

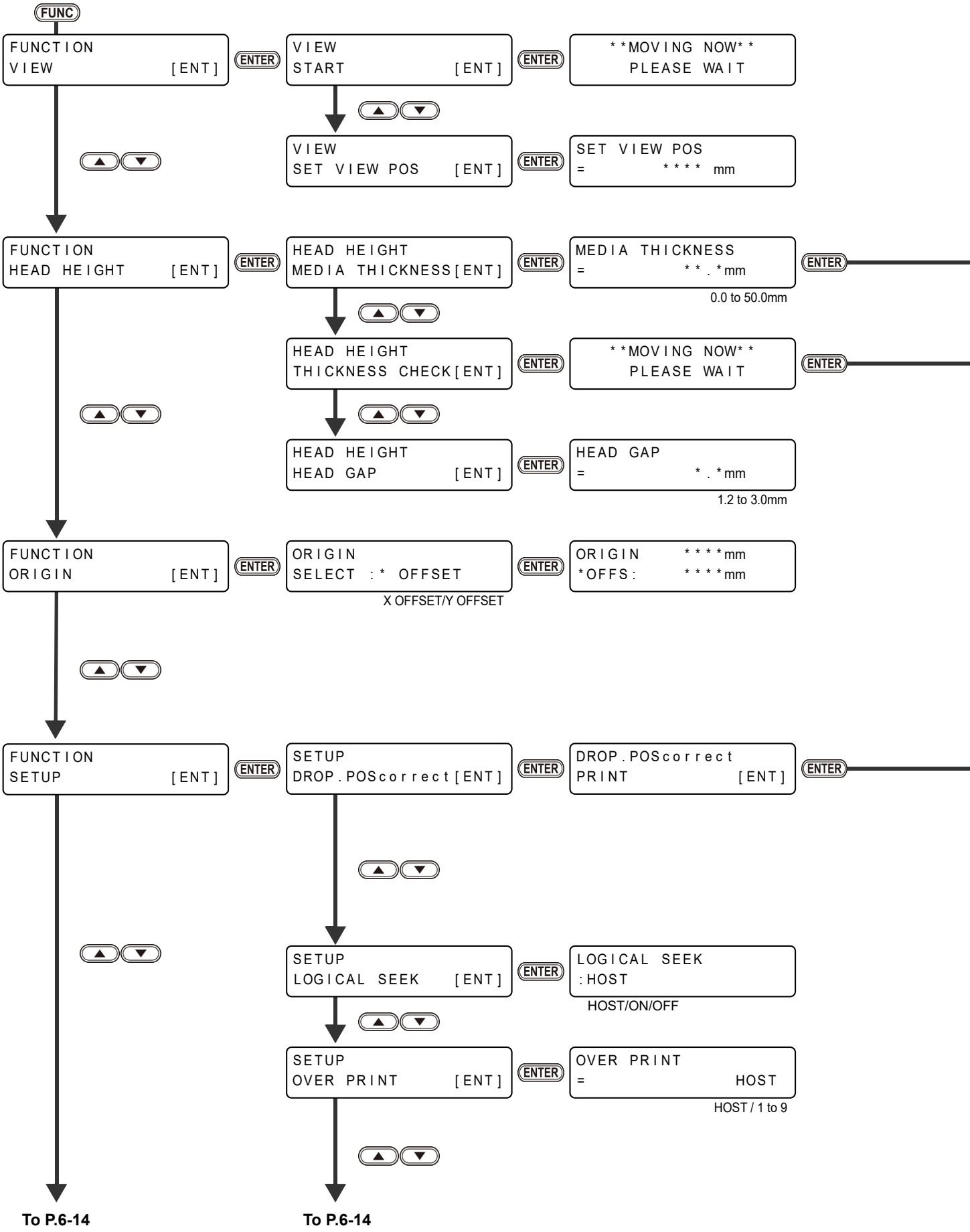

To P.6-14

To P.6-14

```
MEDIA THICKNESS
     PLEASE WAIT
```

```
THICKNESS CHECK
CHECK START     [ENT]
```

ENTER

```
THICKNESS CHECK
    **CHECKING**
```

```
THICKNESS CHECK
            **.*   :ent
```

```
   ** PRINTING **
    PLEASE WAIT
```

ENTER

```
PATTERN1
=              0.0
```

-40 to 40

ENTER

```
PATTERN2
=              0.0
```

-40 to 40

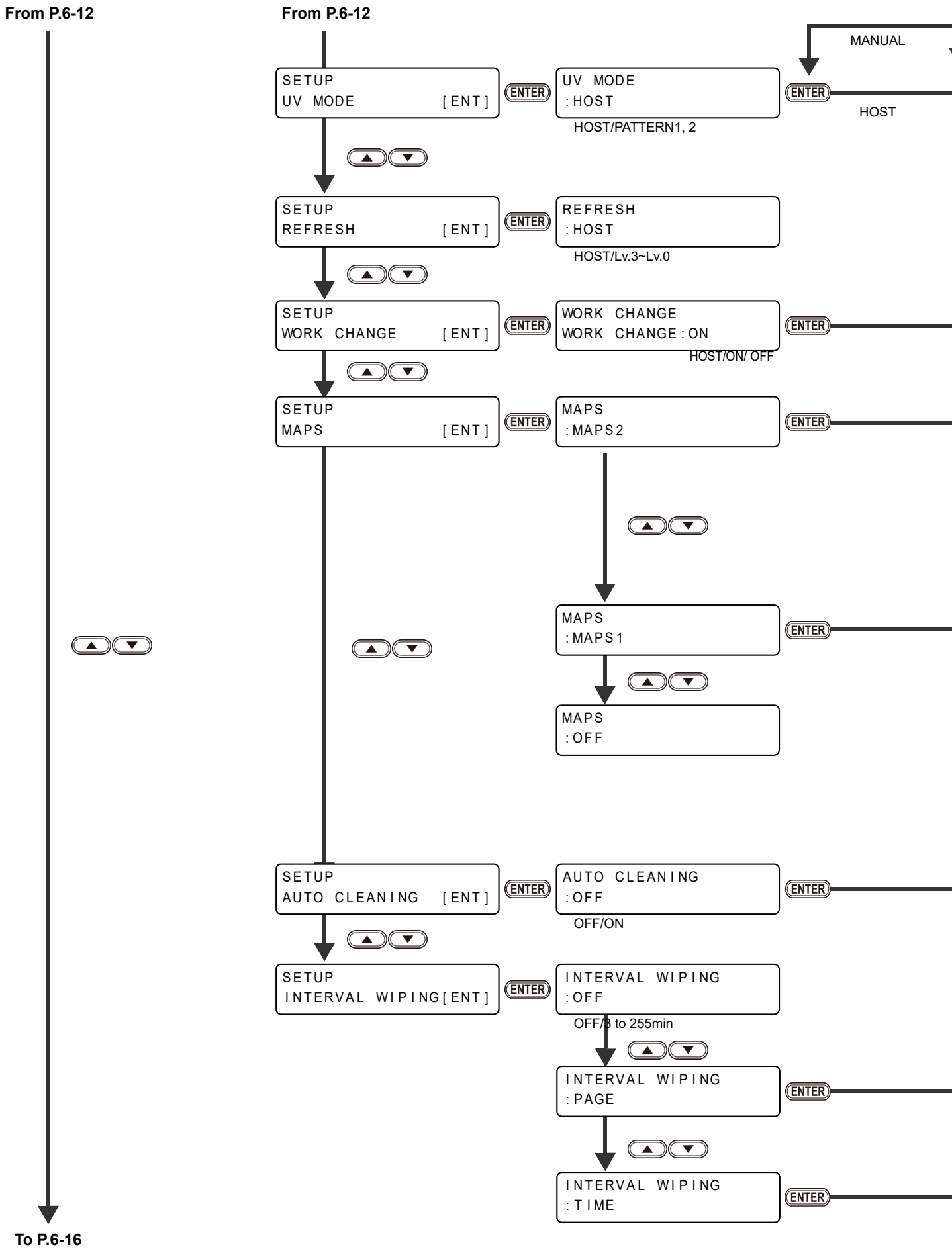
From P.6-12
From P.6-12
SETUP
UV MODE [ENT]
ENTER
UV MODE
:HOST
HOST/PATTERN1, 2
ENTER
MANUAL
HOST
SETUP
REFRESH [ENT]
ENTER
REFRESH
:HOST
HOST/Lv.3~Lv.0
SETUP
WORK CHANGE [ENT]
ENTER
WORK CHANGE
WORK CHANGE:ON
HOST/ON/OFF
ENTER
SETUP
MAPS [ENT]
ENTER
MAPS
:MAPS2
ENTER
MAPS
:MAPS1
ENTER
MAPS
:OFF
SETUP
AUTO CLEANING [ENT]
ENTER
AUTO CLEANING
:OFF
OFF/ON
ENTER
SETUP
INTERVAL WIPING[ENT]
ENTER
INTERVAL WIPING
:OFF
OFF/3 to 255min
INTERVAL WIPING
:PAGE
ENTER
INTERVAL WIPING
:TIME
ENTER
To P.6-16

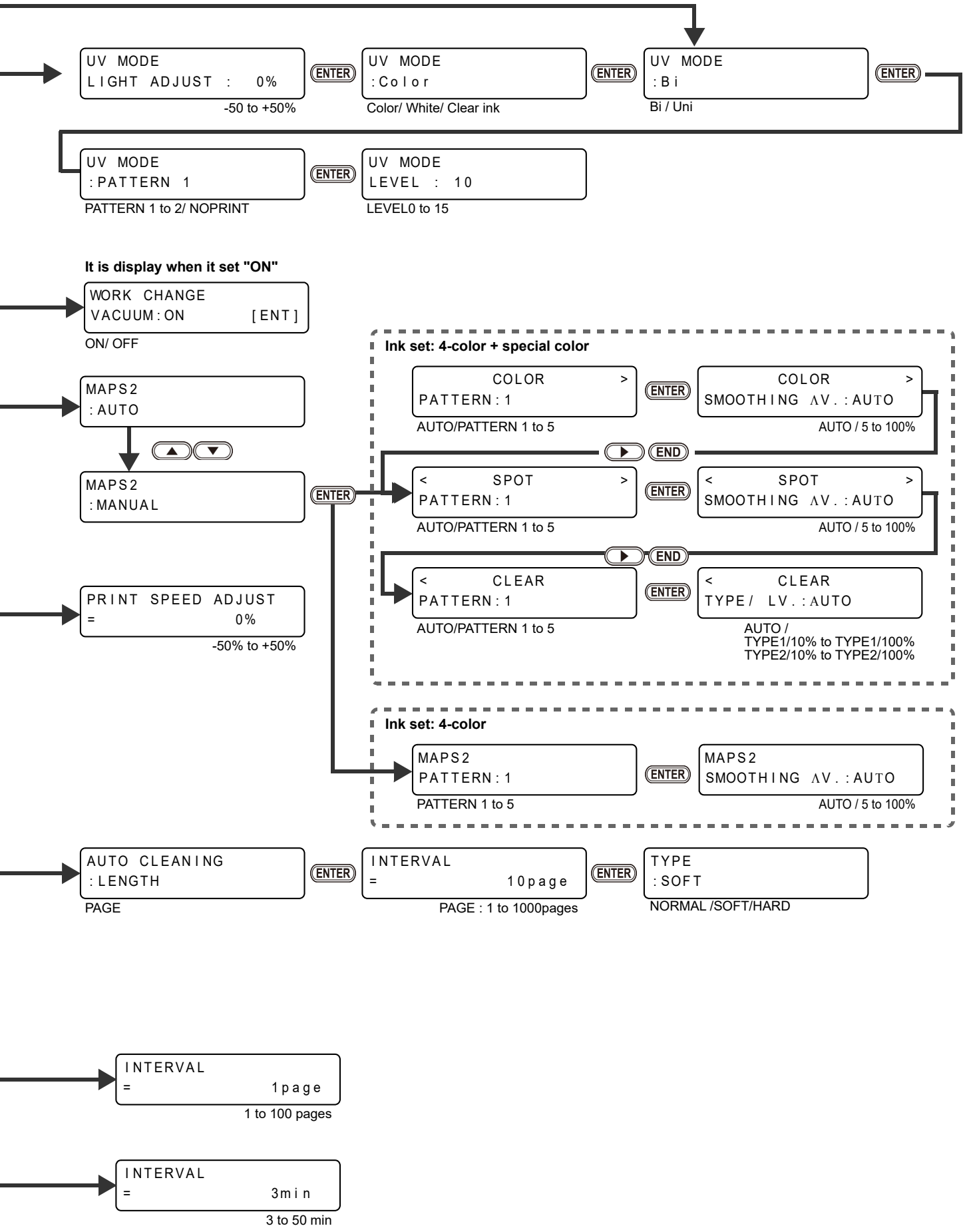
UV MODE
LIGHT ADJUST : 0%
-50 to +50%
ENTER
UV MODE
:Color
Color/ White/ Clear ink
ENTER
UV MODE
:Bi
Bi / Uni
ENTER
UV MODE
:PATTERN 1
PATTERN 1 to 2/ NOPRINT
ENTER
UV MODE
LEVEL : 10
LEVEL0 to 15
It is display when it set "ON"
WORK CHANGE
VACUUM:ON [ENT]
ON/ OFF
MAPS2
:AUTO
MAPS2
:MANUAL
ENTER
PRINT SPEED ADJUST
= 0%
-50% to +50%
Ink set: 4-color + special color
COLOR >
PATTERN:1
AUTO/PATTERN 1 to 5
ENTER
COLOR >
SMOOTHING AV.:AUTO
AUTO / 5 to 100%
END
< SPOT >
PATTERN:1
AUTO/PATTERN 1 to 5
ENTER
< SPOT >
SMOOTHING AV.:AUTO
AUTO / 5 to 100%
END
< CLEAR
PATTERN:1
AUTO/PATTERN 1 to 5
ENTER
< CLEAR
TYPE/ LV.:AUTO
AUTO /
TYPE1/10% to TYPE1/100%
TYPE2/10% to TYPE2/100%
Ink set: 4-color
MAPS2
PATTERN:1
PATTERN 1 to 5
ENTER
MAPS2
SMOOTHING AV.:AUTO
AUTO / 5 to 100%
AUTO CLEANING
:LENGTH
PAGE
ENTER
INTERVAL
= 10page
PAGE : 1 to 1000pages
ENTER
TYPE
:SOFT
NORMAL /SOFT/HARD
INTERVAL
= 1page
1 to 100 pages
INTERVAL
= 3min
3 to 50 min

From P.6-14

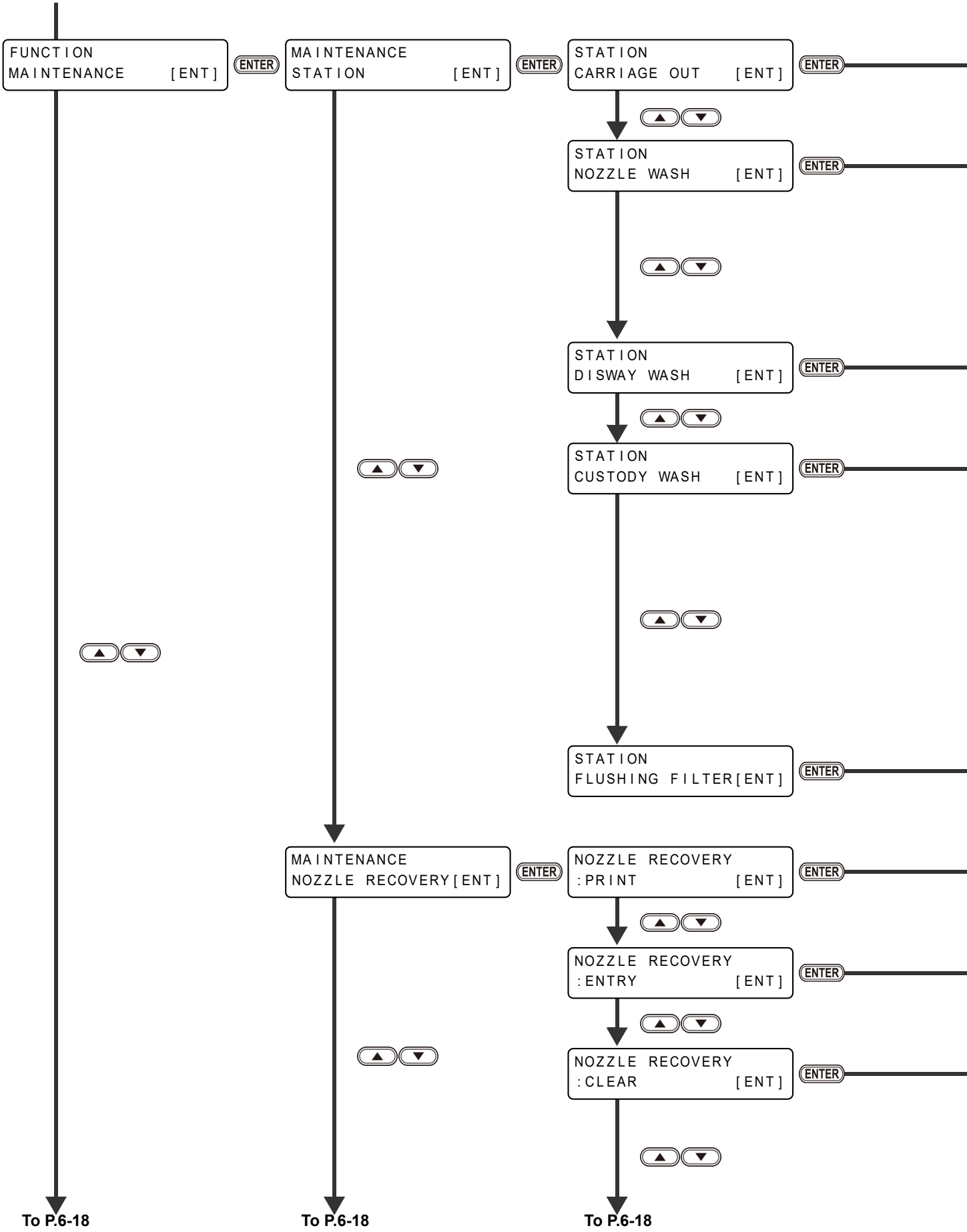

To P.6-18
To P.6-18
To P.6-18

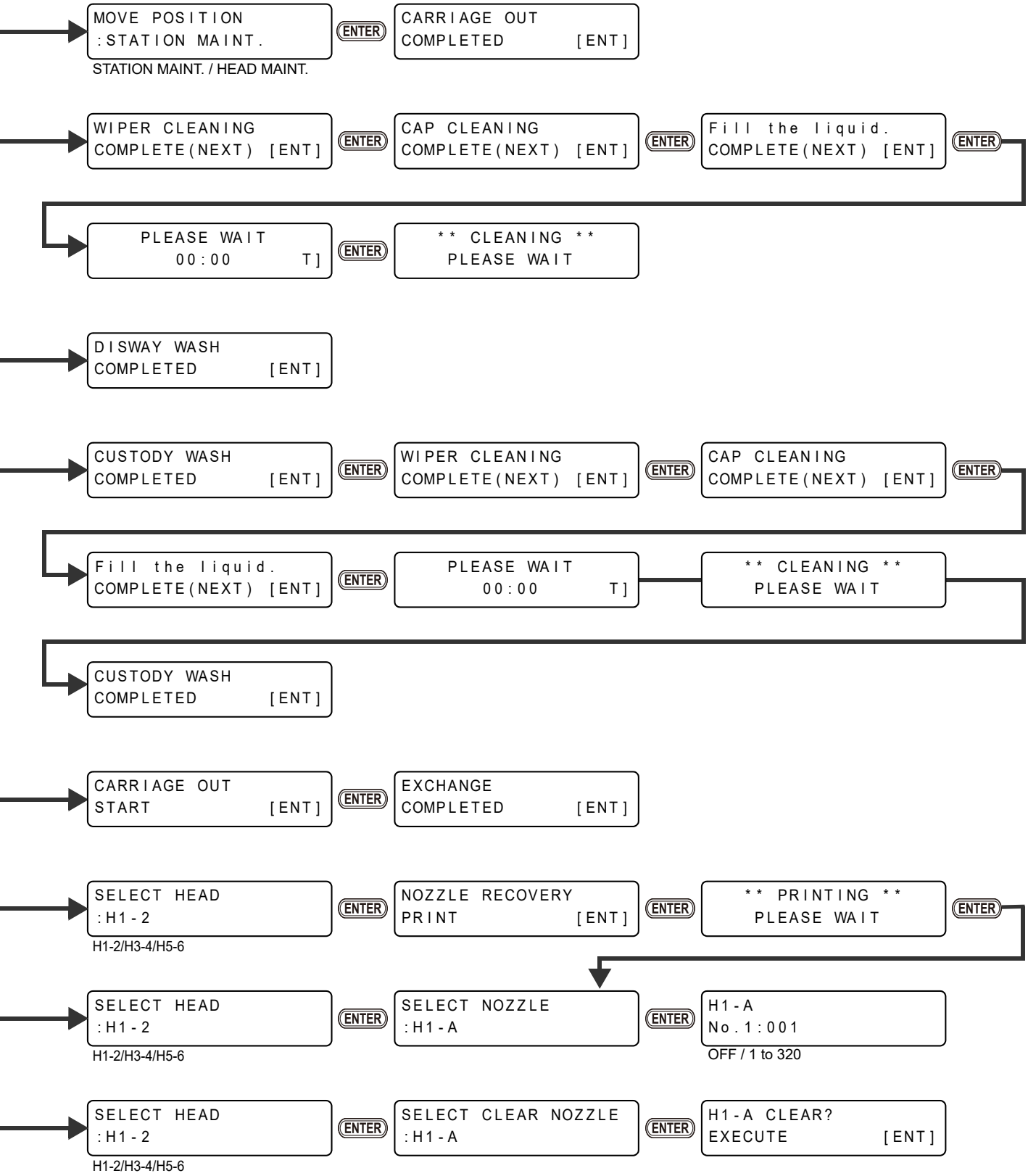
MOVE POSITION
:STATION MAINT.
STATION MAINT. / HEAD MAINT.
ENTER
CARRIAGE OUT
COMPLETED [ENT]
WIPER CLEANING
COMPLETE(NEXT) [ENT]
ENTER
CAP CLEANING
COMPLETE(NEXT) [ENT]
ENTER
Fill the liquid.
COMPLETE(NEXT) [ENT]
ENTER
PLEASE WAIT
00:00 T]
ENTER
** CLEANING **
PLEASE WAIT
DISWAY WASH
COMPLETED [ENT]
CUSTODY WASH
COMPLETED [ENT]
ENTER
WIPER CLEANING
COMPLETE(NEXT) [ENT]
ENTER
CAP CLEANING
COMPLETE(NEXT) [ENT]
ENTER
Fill the liquid.
COMPLETE(NEXT) [ENT]
ENTER
PLEASE WAIT
00:00 T]
** CLEANING **
PLEASE WAIT
CUSTODY WASH
COMPLETED [ENT]
CARRIAGE OUT
START [ENT]
ENTER
EXCHANGE
COMPLETED [ENT]
SELECT HEAD
:H1-2
H1-2/H3-4/H5-6
ENTER
NOZZLE RECOVERY
PRINT [ENT]
ENTER
** PRINTING **
PLEASE WAIT
ENTER
SELECT HEAD
:H1-2
H1-2/H3-4/H5-6
ENTER
SELECT NOZZLE
:H1-A
ENTER
H1-A
No.1:001
OFF / 1 to 320
SELECT HEAD
:H1-2
H1-2/H3-4/H5-6
ENTER
SELECT CLEAR NOZZLE
:H1-A
ENTER
H1-A CLEAR?
EXECUTE [ENT]

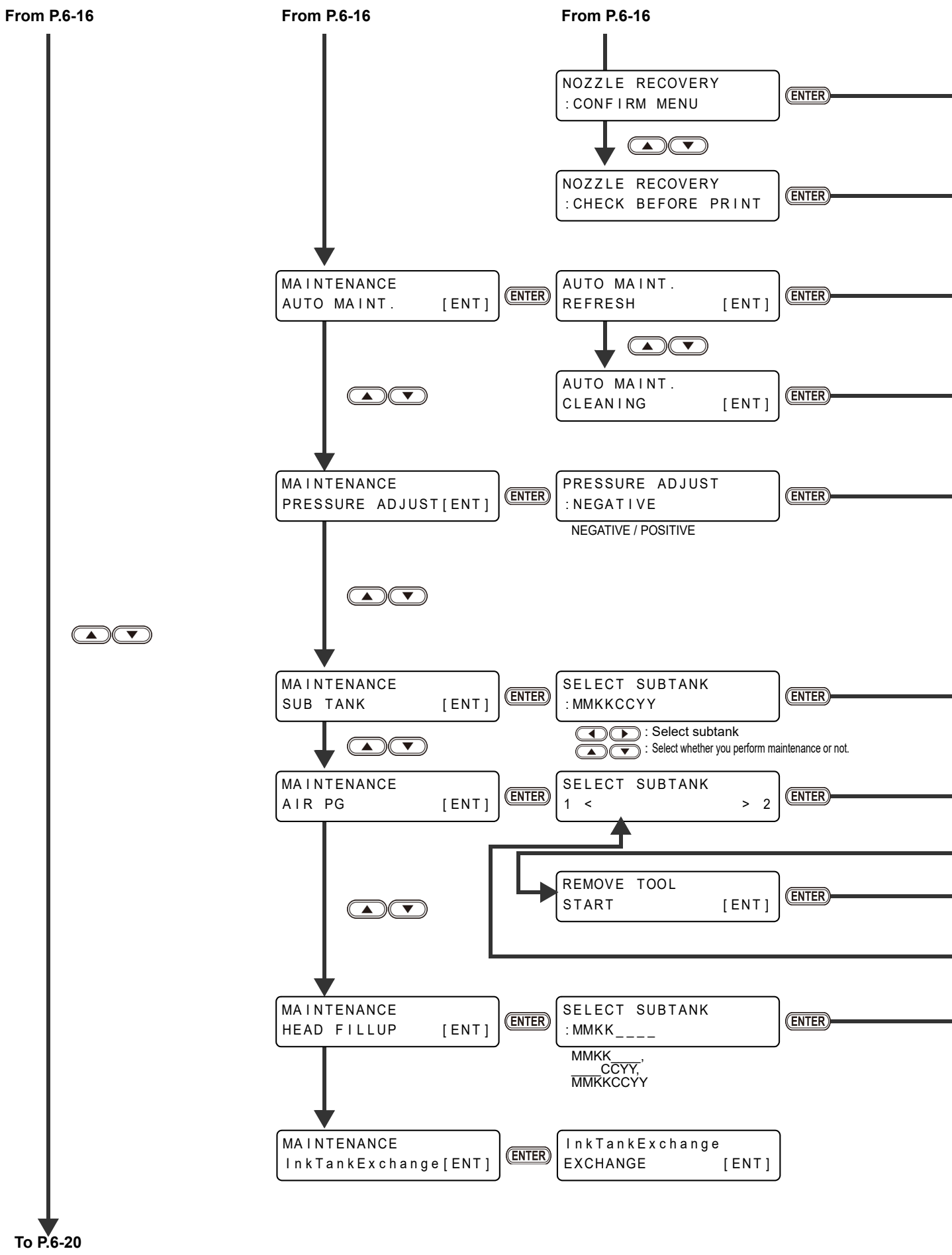
From P.6-16
From P.6-16
From P.6-16
NOZZLE RECOVERY
:CONFIRM MENU
ENTER
NOZZLE RECOVERY
:CHECK BEFORE PRINT
ENTER
MAINTENANCE
AUTO MAINT. [ENT]
ENTER
AUTO MAINT.
REFRESH [ENT]
ENTER
AUTO MAINT.
CLEANING [ENT]
ENTER
MAINTENANCE
PRESSURE ADJUST[ENT]
ENTER
PRESSURE ADJUST
:NEGATIVE
ENTER
NEGATIVE / POSITIVE
MAINTENANCE
SUB TANK [ENT]
ENTER
SELECT SUBTANK
:MMKKCCYY
ENTER
: Select subtank
: Select whether you perform maintenance or not.
MAINTENANCE
AIR PG [ENT]
ENTER
SELECT SUBTANK
1 < > 2
ENTER
REMOVE TOOL
START [ENT]
ENTER
MAINTENANCE
HEAD FILLUP [ENT]
ENTER
SELECT SUBTANK
:MMKK____
ENTER
MMKK____,
____CCYY,
MMKKCCYY
MAINTENANCE
InkTankExchange[ENT]
ENTER
InkTankExchange
EXCHANGE [ENT]
To P.6-20

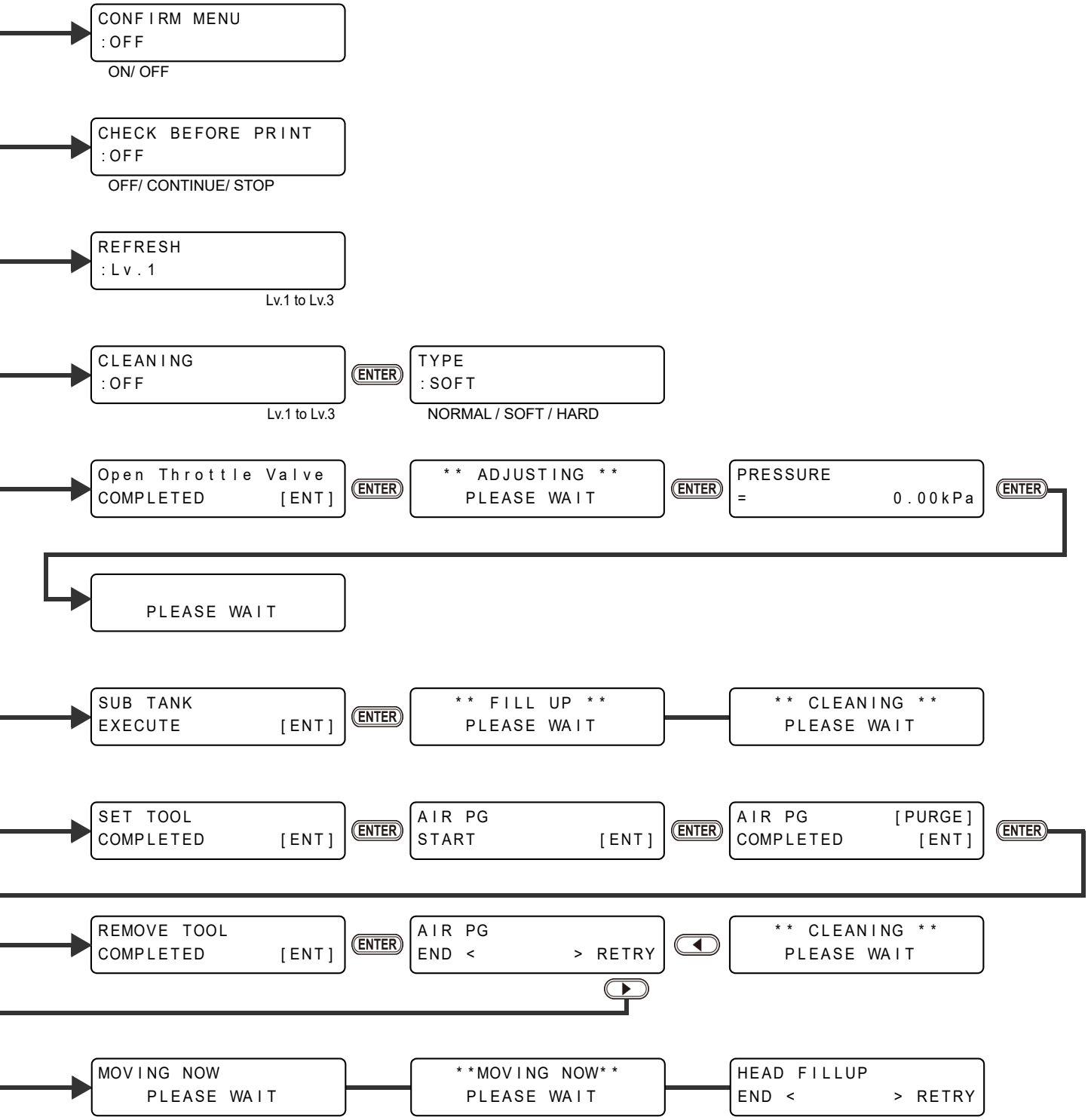
CONFIRM MENU
:OFF
ON/ OFF
CHECK BEFORE PRINT
:OFF
OFF/ CONTINUE/ STOP
REFRESH
:Lv.1
Lv.1 to Lv.3
CLEANING
:OFF
Lv.1 to Lv.3
ENTER
TYPE
:SOFT
NORMAL / SOFT / HARD
Open Throttle Valve
COMPLETED [ENT]
ENTER
** ADJUSTING **
PLEASE WAIT
ENTER
PRESSURE
= 0.00kPa
ENTER
PLEASE WAIT
SUB TANK
EXECUTE [ENT]
ENTER
** FILL UP **
PLEASE WAIT
** CLEANING **
PLEASE WAIT
SET TOOL
COMPLETED [ENT]
ENTER
AIR PG
START [ENT]
ENTER
AIR PG [PURGE]
COMPLETED [ENT]
ENTER
REMOVE TOOL
COMPLETED [ENT]
ENTER
AIR PG
END < > RETRY
** CLEANING **
PLEASE WAIT
MOVING NOW
PLEASE WAIT
MOVING NOW
PLEASE WAIT
HEAD FILLUP
END < > RETRY

From P.6-18

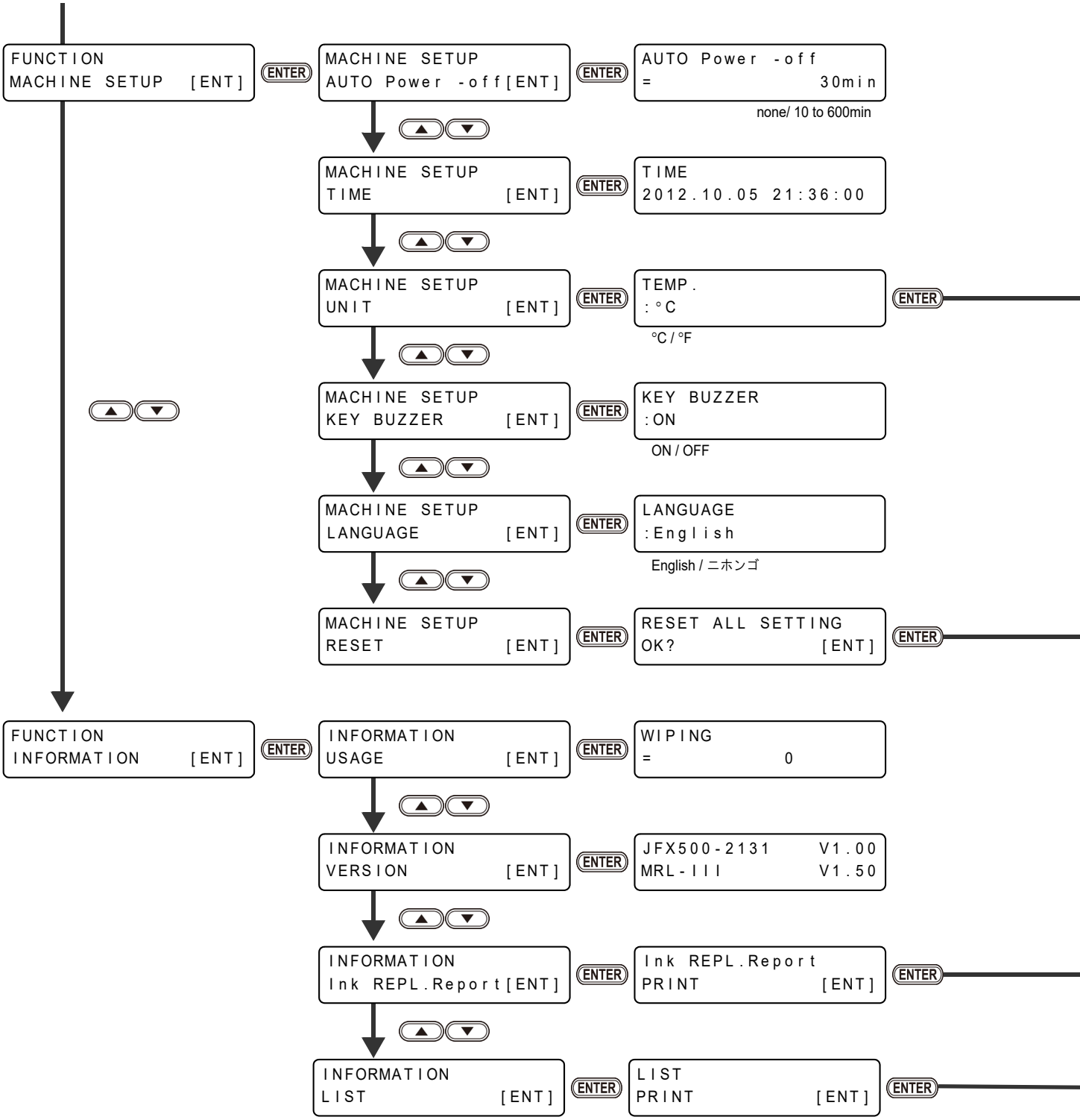
FUNCTION
MACHINE SETUP [ENT]
ENTER
MACHINE SETUP
AUTO Power -off[ENT]
ENTER
AUTO Power -off
= 30min
none/ 10 to 600min
MACHINE SETUP
TIME [ENT]
ENTER
TIME
2012.10.05 21:36:00
MACHINE SETUP
UNIT [ENT]
ENTER
TEMP.
:°C
°C / °F
ENTER
MACHINE SETUP
KEY BUZZER [ENT]
ENTER
KEY BUZZER
:ON
ON / OFF
MACHINE SETUP
LANGUAGE [ENT]
ENTER
LANGUAGE
:English
English / ニホンゴ
MACHINE SETUP
RESET [ENT]
ENTER
RESET ALL SETTING
OK? [ENT]
ENTER
FUNCTION
INFORMATION [ENT]
ENTER
INFORMATION
USAGE [ENT]
ENTER
WIPING
= 0
INFORMATION
VERSION [ENT]
ENTER
JFX500-2131 V1.00
MRL-III V1.50
INFORMATION
Ink REPL.Report[ENT]
ENTER
Ink REPL.Report
PRINT [ENT]
ENTER
INFORMATION
LIST [ENT]
ENTER
LIST
PRINT [ENT]
ENTER

LENGTH
: mm

mm / inch

RESET
EXECUTE [ENT]

ENTER

Settings are initialized

PLEASE WAIT
** PRINTING **

PLEASE WAIT
** PRINTING **

JFX200-2513 Operation Manual

July, 2025

MIMAKI ENGINEERING CO.,LTD.
2182-3 Shigeno-otsu, Tomi-shi, Nagano 389-0512 JAPAN

D202563-28-30072025

© MIMAKI ENGINEERING CO., LTD.2016

KW
FW : 2.90